SHARP PARTS GUIDE

CODE:00ZMX2700NP1/

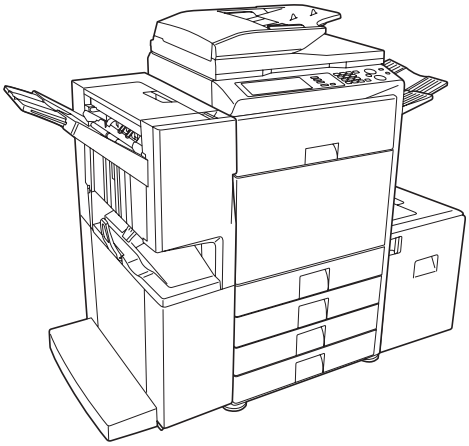

デジタルフルカラー複合機
Digital Full Color Multifunction System

MX-2300G/MX-2300FG
MX-2700G/MX-2700FG
MODEL MX-2300N/MX-2700N

このパーツガイドに掲載されている表示価格ランクは消費税抜きです。

CONTENTS

1 外装 1(Exteriors 1)
2 外装 2(Exteriors 2)
3 OC ｶﾊﾞｰﾕﾆｯﾄ (OC cover unit) [MX-2300G, MX-2700G]
4 原稿検知ﾕﾆｯﾄ (Document detect unit)
5 操作部 (Operation unit)
6 ｽｷｬﾅｰﾕﾆｯﾄ 1(Scanner unit 1)
7 ｽｷｬﾅｰﾕﾆｯﾄ 2(Scanner unit 2)
8 ﾗﾝﾌﾟﾕﾆｯﾄ (Lamp unit)
9 500 ｶｾｯﾄ (500 cassette)
10 ｶｾｯﾄ給紙ﾕﾆｯﾄ 1(Cassette paper feed unit 1)
11 ｶｾｯﾄ給紙ﾕﾆｯﾄ 2(Cassette paper feed unit 2)
12 給紙搬送部 (Paper feed transport section)
13 右下ﾄﾞｱﾕﾆｯﾄ (Right lower door unit)
14 ﾏﾙﾁﾄﾚｲﾕﾆｯﾄ (Multi tray unit)
15 ﾏﾙﾁ給紙ﾕﾆｯﾄ 1(Multi paper feed unit 1)
16 ﾏﾙﾁ給紙ﾕﾆｯﾄ 2(Multi paper feed unit 2)
17 PS ﾕﾆｯﾄ 1(PS unit 1)
18 PS ﾕﾆｯﾄ 2(PS unit 2)
19 ﾄﾅｰ搬送ﾊﾟｲﾌﾟﾕﾆｯﾄ (Toner transport pipe unit)
20 ﾚｼﾞｽﾄｾﾝｻｰﾕﾆｯﾄ (Resist sensor unit)
21 LSU 部 (LSU section)
22 DV ﾕﾆｯﾄ 1(DV unit 1)
23 DV ﾕﾆｯﾄ 2(DV unit 2)
24 ﾌﾟﾛｾｽﾕﾆｯﾄ (Process unit)
25 1 次転写ｸﾘｰﾅｰﾕﾆｯﾄ(1st transfer cleaner unit)
26 1 次転写ﾕﾆｯﾄ 1(1st transfer unit 1)
27 1 次転写ﾕﾆｯﾄ 2(1st transfer unit 2)
28 1 次転写ﾕﾆｯﾄ 3(1st transfer unit 3)
29 2 次転写ﾕﾆｯﾄ 1(2nd transfer unit 1)
30 2 次転写ﾕﾆｯﾄ 2(2nd transfer unit 2)
31 定着部 1(Fusing unit 1)
32 定着部 2(Fusing unit 2)
33 定着部 3(Fusing unit 3)
34 右ﾄﾞｱﾕﾆｯﾄ 1(Right door unit 1)
35 右ﾄﾞｱﾕﾆｯﾄ 2(Right door unit 2)
36 右ﾄﾞｱﾕﾆｯﾄ 3(Right door unit 3)
37 排紙ﾕﾆｯﾄ 1(Delivery unit 1)
38 排紙ﾕﾆｯﾄ 2(Delivery unit 2)
39 給紙駆動部 (Paper feed drive section)
40 ﾒｲﾝ駆動部 1(Main drive section 1)
41 ﾒｲﾝ駆動部 2(Main drive section 2)
42 ｺﾝﾄﾛｰﾙ BOX 1(Control BOX 1)
43 ｺﾝﾄﾛｰﾙ BOX 2(Control BOX 2)
44 電源ﾕﾆｯﾄ (Power supply unit)
45 前ﾌﾚｰﾑ部 (Front frame section)
46 後ﾌﾚｰﾑ部 1(Rear frame section 1)
47 後ﾌﾚｰﾑ部 2(Rear frame section 2)
48 ﾌﾚｰﾑ部 1(Frame section 1)
49 ﾊｰﾈｽ部 (Wiring)
50 RSPF ｶﾞｲ装部 (RSPF Exteriors) [MX-2300FG/N, MX-2700FG/N]
51 RSPF 原稿ﾄﾚｲ (RSPF Original tray) [MX-2300FG/N, MX-2700FG/N]
52 RRSPF 給紙部 (RSPF Paper feeding section) [MX-2300FG/N, MX-2700FG/N]
53 RSPF 分離部 (RSPF Separation section) [MX-2300FG/N, MX-2700FG/N]
54 RSPF 搬送部 1(RSPF Transport section 1) [MX-2300FG/N, MX-2700FG/N]
55 RSPF 搬送部 2(RSPF Transport section 2) [MX-2300FG/N, MX-2700FG/N]
56 RSPF 搬送部 3(RSPF Transport section 3) [MX-2300FG/N, MX-2700FG/N]
57 RSPF 中間ﾄﾚｲ (RSPF Middle tray) [MX-2300FG/N, MX-2700FG/N]
58 RSPF 駆動ﾕﾆｯﾄ (RSPF Drive unit) [MX-2300FG/N, MX-2700FG/N]
59 梱包及び付属品(Packing material & Accessories)
■ 索引

本書はサービス活動用に作成した資料です。
一部内容が製品の改良・改善等により予告なしに変わることがあります。

SHARP CORPORATION

This document has been published to be used for after sales service only.
The contents are subject to change without notice.

補修部品のランク付

市場における補修部品の在庫管理が、適正に運営出来る手助けとなることを、目的とします。

Aランク ： メンテナンスパーツ、メンテナンスパーツには入っていないがメンテナンスパーツに近い消耗パーツ。
Bランク ： 性能・機能パーツ（センサー、クラッチ等の電気パーツ）、消耗パーツ。
Eランク ： 基板含むユニットパーツ。
Dランク ： 整備パーツ（外装、パッキング、同梱パーツ）。
Cランク ： 上記ランク以外のパーツ（基板の子部品を除いたもの）。

DEFINITION

Rank A : Maintenance parts, and consumable parts which are not included in but closely related to maintenance parts
Rank B : Performance/function parts (sensors, clutches, and other electrical parts), consumable parts
Rank E : Unit parts including PWB
Rank D : Preparation parts (External fitting, packing, parts packed together)
Rank C : Parts other than the above (excluding sub components of PWB)

安全性・信頼性確保のため部品は、必ず正規のものをご使用下さい。
⚠印の商品は、安全上重要な部品です。交換をする時は、安全及び性能維持のため必ず指定の部品をご使用下さい。
Because parts marked with "⚠" is indispensable for the machine safety maintenance and operation, it must be replaced with the parts specific to the product specification.

○ 当モデルのサービス資料には、この資料以外にサービスマニュアル（回路図含む）があります。合わせてご利用下さい。
○ Other than this Parts Guide, please refer to documents Service Manual(including Circuit Diagram)of this model.
○ Please use the 13 digit code described in the right hand corner of front cover of the document, when you place an order.
○ For U.S. only-Use order codes provided in advertising literature. Do not order from parts department.

---

1 外装 1(Exteriors 1)

NO.	PARTS CODE	PRICE RANK Ex.	PRICE RANK Ja.	NEW MARK	PART RANK	DESCRIPTION		
1	GCAB-1099FCZZ	AQ	EQ	N	D	Top cabinet left		上ｷｬﾋﾞ左
2	XHBS740P08000	AA	DD		C	Screw(4×8)		ﾋﾞｽ
3	LFiX-0624FCZZ	AK	DX	N	C	Glass fixing plate L	[MX-2300G,MX-2700G]	ｶﾞﾗｽ押え左
	LFiX-0595FCZZ	AH	DX	N	C	Glass fixing plate L	[MX-2300FG/N,MX-2700FG/N]	ｶﾞﾗｽ押え左
4	XBTS740P06000	AA	DD		C	Screw(4×6)		ﾋﾞｽ
5	PGLSP0109FCZZ	BD	GN	N	A	SPF slit glass	[MX-2300FG/N,MX-2700FG/N]	SPF ｽﾘｯﾄｶﾞﾗｽ
6	PGUMS0283FCZ1	AA	DJ		C	Table glass gum	[MX-2300FG/N,MX-2700FG/N]	ﾃｰﾌﾞﾙｶﾞﾗｽｺﾞﾑ
7	PSHEZ5368FCZZ	AD	DJ	N	C	SPF glass fixing sheet L(Long)	[MX-2300FG/N, MX-2700FG/N]	SPF ｶﾞﾗｽ固定ｼｰﾄ左
8	PSHEZ5367FCZZ	AC	DJ	N	C	SPF glass fixing sheet R(Short)	[MX-2300FG/N, MX-2700FG/N]	SPF ｶﾞﾗｽ固定ｼｰﾄ右
9	PSHEZ5366FCZZ	AB	DJ	N	C	White sheet	[MX-2300FG/N,MX-2700FG/N]	白ﾏｲﾗｰ
10	LX-BZ1024FCZZ	AG	DX	N	C	SPF step screw R	[MX-2300FG/N,MX-2700FG/N]	SPF 段ﾋﾞｽR
11	PCOVP0941FCZ3	AD	DJ	N	D	Top cabinet rear cover LP		上ｷｬﾋﾞ後ｶﾊﾞｰLP
12	GCOV-0241FCZZ	AU	FG	N	D	Top cabinet rear cover		上ｷｬﾋﾞ後ｶﾊﾞｰ
13	PCOVP0911FCZ3	AD	DJ	N	D	Top cabinet rear cover RP		上ｷｬﾋﾞ後ｶﾊﾞｰRP
14	LX-BZ0776FCPZ	AG	DD	N	C	Step screw R	[MX-2300FG/N,MX-2700FG/N]	段ﾋﾞｽR
15	GFTA-0028FCZZ	AF	DS	N	D	Top cabinet rear cover lid	[MX-2300G,MX-2700G]	上ｷｬﾋﾞ後ｶﾊﾞｰﾌﾀ
16	LFiX-0596FCZZ	AG	DX	N	C	Glass fixing plate R		ｶﾞﾗｽ押え右
17	GCAB-1098FCZZ	AP	EQ	N	D	Top cabinet right		上ｷｬﾋﾞ右
18	XBBS730P06000	AC	DD		C	Screw(3×6)		ﾋﾞｽ
19	LDAiU0695FCZZ	AV	FG	N	D	Operaiton base plate		操作台板
20	XEBS740P08000	AA	DD		C	Screw(4×8)		ﾋﾞｽ
21	HPNLC0262FCZZ	AE	DJ	N	D	Operation panel B		操作ﾊﾟﾈﾙB
22	XBTSC50P16000	AA	DD		C	Screw(5×16)	[MX-2300FG/N,MX-2700FG/N]	ﾋﾞｽ
23	TLABH5006FCZZ	AD	DJ	N	D	Copy prohibition caution label	(Japan only)	ｺﾋﾟｰ禁止注意ﾗﾍﾞﾙ
24	CPLTP6571FC01	AP	EQ	N	C	Document regulation plate	(Japan only)	原稿基準板
	CPLTP6571FC02	AP	EQ	N	C	Document regulation plate	(Except Japan)	原稿基準板
25	CPLTP6570FC01	AH	DX	N	C	Index plate	(Japan only)	指標板
	CPLTP6570FC02	AH	DX	N	C	Index plate	(Except Japan)	指標板
26	PSHEZ5361FCZZ	AG	DX	N	C	Shading sheet		ｼｪｰﾃﾞｨﾝｸﾞｼｰﾄ
502	DUNT-7434DSZZ	BB	GD	N	E	Table glass	(Japan only)	ﾃｰﾌﾞﾙｶﾞﾗｽ
	DUNT-7434DS11	BA	FX	N	E	Table glass	(Except Japan)	ﾃｰﾌﾞﾙｶﾞﾗｽ

1 外装 1(Exteriors 1)

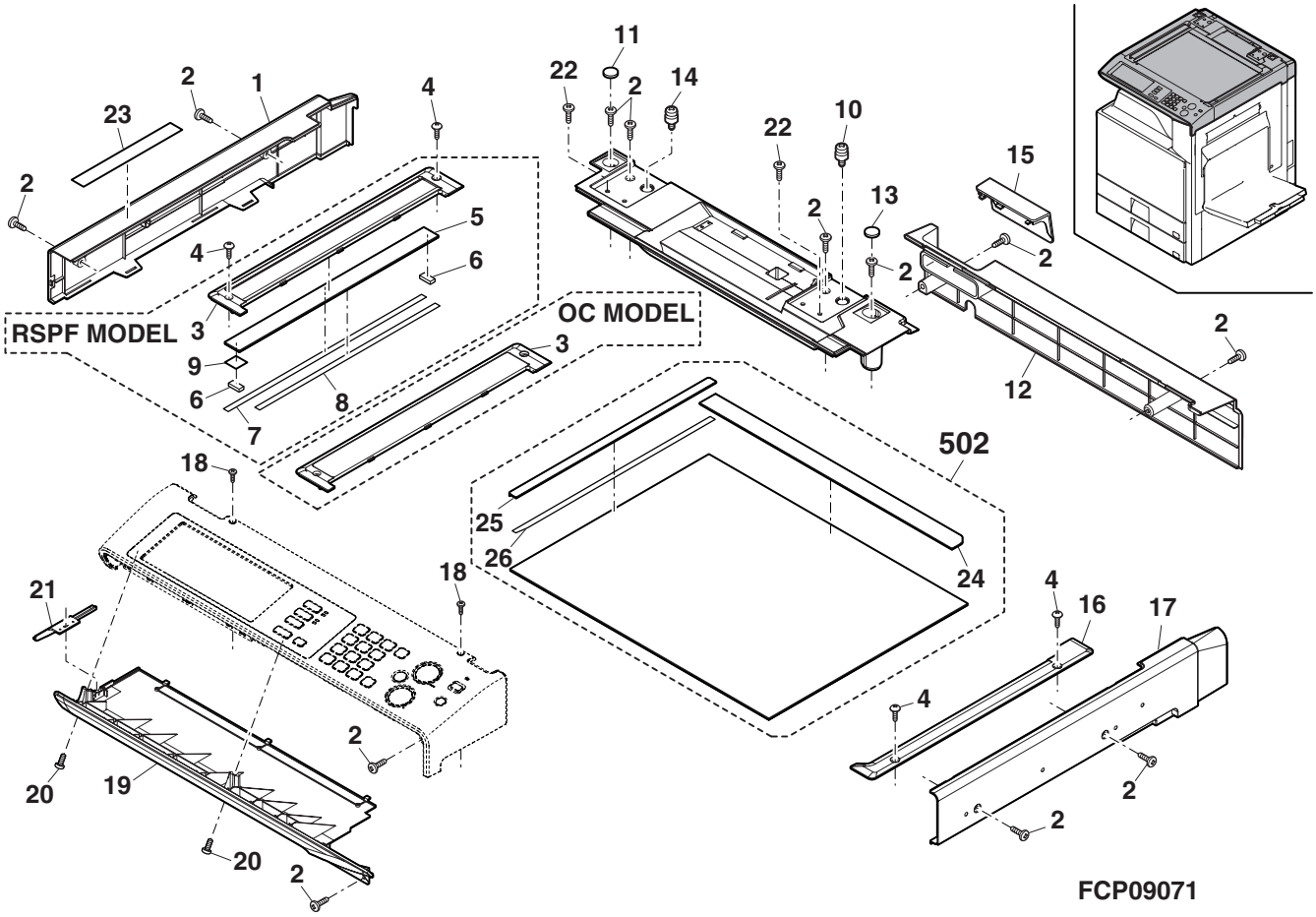

2 外装 2(Exteriors 2)

NO.	PARTS CODE	PRICE RANK Ex.	PRICE RANK Ja.	NEW MARK	PART RANK	DESCRIPTION	
1	GCOV-0242FCZ1	AR	EQ	N	D	Delivery cover	排紙ｶﾊﾞｰ
2	XHBS740P08000	AA	DD		C	Screw(4×8)	ﾋﾞｽ
3	GCAB-1102FCZZ	AP	EQ	N	D	Delivery tray left	排紙ﾄﾚｲｷｬﾋﾞ左
4	GCAB-1097FCZZ	AK	DX	N	D	Left cabinet R	左ｷｬﾋﾞ後
5	XEBS740P08000	AA	DD		C	Screw(4×8)	ﾋﾞｽ
6	GCAB-1103FCZZ	AU	EZ	N	D	Delivery tray rear joint cabinet	排紙ﾄﾚｲ後連結ｷｬﾋﾞ
8	GCAB-1101FCZ2	BC	GD	N	D	Delivery tray cabinet	排紙ﾄﾚｲｷｬﾋﾞ
9	GCAB-1116FCZZ	AS	EQ	N	D	Left cabinet lower rear	左ｷｬﾋﾞ下後
10	XHBS730P06000	AC	DD		C	Screw(3×6)	ﾋﾞｽ
11	PFTA-0135FCPZ	AD	DJ	N	D	Connector cover B	ｺﾈｸﾀｰﾌﾀ B
12	GCAB-1115FCZZ	AC	DJ	N	D	Desk joint cover	ﾃﾞｽｸ連結用ﾌﾀ
13	GCAB-1096FCZZ	BC	GJ	N	D	Left cabinet	左ｷｬﾋﾞ
14	GCAB-1114FCZZ	BC	GD	N	D	Rear cabinet	後ｷｬﾋﾞ
16	LHLDW1152FCZZ	AC	DJ		C	Bush	ﾌﾞｯｼｭ
17	GCAB-1095FCZ1	AL	EB	N	D	Right joint cabinet [MX-2300FG,MX-2700FG]	右連結ｷｬﾋﾞ
	GCAB-1095FCZZ	AL	EB	N	D	Right joint cabinet [MX-2300G/N,MX-2700G/N]	右連結ｷｬﾋﾞ
19	GFTA-0027FCZZ	AG	DS	N	D	Desk joint cover R	ﾃﾞｽｸ連結ﾌﾀ後
20	GCAB-1149FCZZ	AQ	EQ	N	D	Right cabinet R cover	右ｷｬﾋﾞ後ｶﾊﾞｰ
21	PCOVP1878FCZZ	AE	DS	N	D	Ozon filter cover	ｵｿﾞﾝﾌｨﾙﾀｰｶﾊﾞｰ
22	GCAB-1094FCZ1	AU	EZ	N	D	Right cabinet R	右ｷｬﾋﾞ後
25	GCAB-1092FCZZ	AT	EZ	N	D	Right cabinet F	右ｷｬﾋﾞ前
26	PFTAP0150FCZZ	AC	DJ	N	D	Card reader cover	ｶｰﾄﾞﾘｰﾀﾞｰﾌﾀ
27	GCAB-1091FCZZ	AP	EQ	N	D	Front cabinet upper	前ｷｬﾋﾞ上
28	PCOVP1868FCZZ	AX	FG	N	D	Frame cover A	ﾌﾚｰﾑｶﾊﾞｰA
29	PCOVP1832FCZ1	AR	EQ	N	D	Front upper frame cover (AB series)	前上ﾌﾚｰﾑｶﾊﾞｰ
	PCOVP1832FCZZ	AR	EQ	N	D	Front upper frame cover (Inch series)	前上ﾌﾚｰﾑｶﾊﾞｰ
30	PCOVP1869FCZ1	AS	EZ	N	D	Frame cover B	ﾌﾚｰﾑｶﾊﾞｰB
32	MHNG-0220FCZZ	AG	DX	N	C	Front cabinet hinge	前ｷｬﾋﾞﾋﾝｼﾞ
33	PBARP0045FCZZ	AE	DJ	N	D	LSU cleaning bar	LSU ｸﾘｰﾆﾝｸﾞ棒
35	CDAiU0699DS71	AK	EB	N	E	LSU cleaning unit	LSU ｸﾘｰﾆﾝｸﾞﾕﾆｯﾄ
36	XEBS730P08000	AC	DD		C	Screw(3×8)	ﾋﾞｽ
37	LBNDZ0077FCZ1	AD	DJ	N	C	Front cabinet band	前ｷｬﾋﾞﾊﾞﾝﾄﾞ
38	LPLTM5027FCZZ	AC	DJ		C	MG catch plate S	MG ｷｬｯﾁﾌﾟﾚｰﾄS
39	CCAB-1090FC01	BA	FX	N	D	Front cabinet	前ｷｬﾋﾞ
40	GFTA-0026FCZZ	AF	DS	N	D	Rear cabinet cover	後ｷｬﾋﾞ用ﾌﾀ
42	PCOVP1870FCZZ	AE	DJ	N	D	Power supply switch cover	電源ｽｲｯﾁｶﾊﾞｰ
43	PMAGT0015FCPZ	AF	DS	N	C	Magnet catch(10P)	ﾏｸﾞﾈｯﾄｷｬｯﾁ
44	MSPRC3507FCZZ	AC	DJ	N	C	Damper pressure spring	ﾀﾞﾝﾊﾟｰ加圧ｽﾌﾟﾘﾝｸﾞ
45	MCAMP0118FCZZ	AC	DJ	N	C	Damper cum	ﾀﾞﾝﾊﾟｰｶﾑ
46	LHLDZ1712FCZZ	AC	DJ	N	C	Waste toner box holder L	廃ﾄﾅｰﾎﾞｯｸｽﾎﾙﾀﾞｰL
47	PSHEZ5455FCZ1	AG	DJ	N	C	Damper sheet L	ﾀﾞﾝﾊﾟｰｼｰﾄL
48	LX-BZ0747FCZZ	AB	DD		C	Step screw(M4)	段ﾋﾞｽ
49	LHLDZ1713FCZZ	AC	DJ	N	C	Waste toner box holder R	廃ﾄﾅｰﾎﾞｯｸｽﾎﾙﾀﾞｰR
50	PSHEZ5456FCZ1	AG	DJ	N	C	Damper sheet R	ﾀﾞﾝﾊﾟｰｼｰﾄR
51	CYOK-0060DS52	AZ	FQ	N	A	Waste toner bottol	廃ﾄﾅｰﾎﾞﾄﾙ
52	CBDGD0050FC01	AE	DJ	N	D	Model name plate [MX-2300G]	機種名ﾌﾟﾚｰﾄ
	CBDGD0050FC02	AE	DJ	N	D	Model name plate [MX-2300FG]	機種名ﾌﾟﾚｰﾄ
	CBDGD0050FC03	AE	DJ	N	D	Model name plate [MX-2300N]	機種名ﾌﾟﾚｰﾄ
	CBDGD0050FC04	AE	DJ	N	D	Model name plate [MX-2700G]	機種名ﾌﾟﾚｰﾄ
	CBDGD0050FC05	AE	DJ	N	D	Model name plate [MX-2700FG]	機種名ﾌﾟﾚｰﾄ
	CBDGD0050FC06	AE	DJ	N	D	Model name plate [MX-2700N]	機種名ﾌﾟﾚｰﾄ
53	HBDGD0048FCZZ	AP	EQ	N	D	Front cabinet badge	前ｷｬﾋﾞﾊﾞｯｼﾞ
54	PCOVP2022FCZZ	AP	EQ	N	D	Manual cover	取説ｶﾊﾞｰ
56	TLABZ5112FCZZ	AC	DJ	N	D	Heater switch label (Japan only)	ﾋｰﾀｰｽｲｯﾁﾗﾍﾞﾙ
57	TLABG5005FCZZ	AC	DJ	N	D	Class 1 label (Japan only)	ｸﾗｽ1ﾗﾍﾞﾙ
58	TLABH5004FCZZ	AB	DJ	N	D	Plug caution label (Japan only)	ﾌﾟﾗｸﾞｺｰｼｮﾝﾗﾍﾞﾙ
59	TCAUA1069FCZZ	AC	DJ	N	D	Service caution label (Except Japan)	ｻｰﾋﾞｽ注意ﾗﾍﾞﾙ
501	CDAiU0699DS51	AL	EB	N	E	LSU cleaning unit(10P)	LSU ｸﾘｰﾆﾝｸﾞﾕﾆｯﾄ

2 外装 2(Exteriors 2)

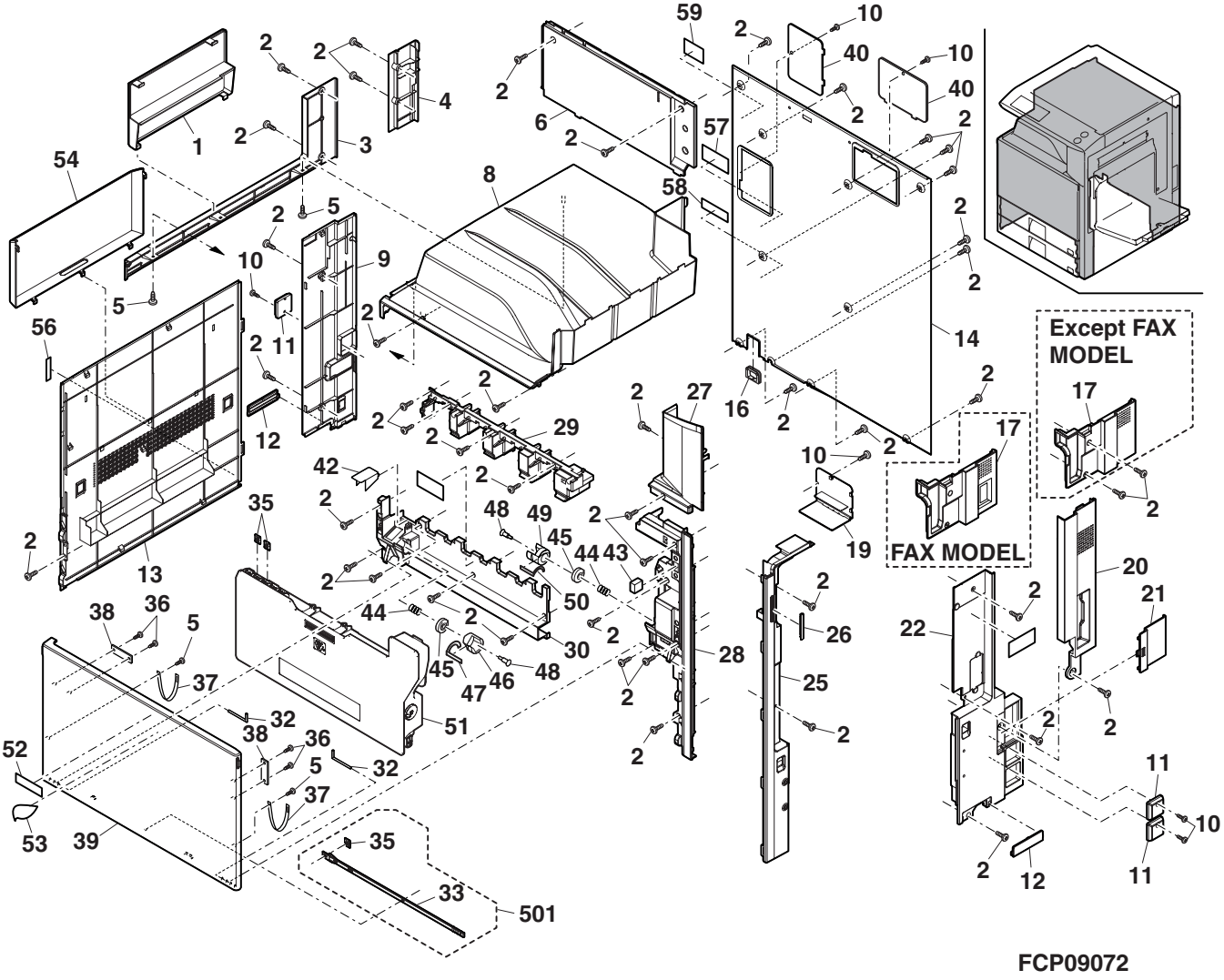

3 OC ｶﾊﾞｰﾕﾆｯﾄ (OC cover unit)[MX-2300G,MX-2700G]

NO.	PARTS CODE	PRICE RANK Ex.	PRICE RANK Ja.	NEW MARK	PART RANK	DESCRIPTION	
1	GCOV−0243FCZZ	AY	FQ	N	D	OC cover F	OC ｶﾊﾞｰ F
2	GCOV−0247FCZZ	AS	EQ	N	D	OC stocker	OC ｽﾄｯｶｰ
3	GCOV−0244FCZZ	BA	FX	N	D	OC cover R	OC ｶﾊﾞｰ R
4	MHNG−0218FCZZ	AD	DJ		C	OC cover hinge	OC ｶﾊﾞｰﾋﾝｼﾞ
5	LPｉNS0346FCZZ	AE	DS	N	C	OC cover hinge pin	OC ｶﾊﾞｰﾋﾝｼﾞﾋﾟﾝ
6	XJBS740P08000	AB	DD		C	Screw(4×8)	ﾋﾞｽ
8	XJBS740P10000	AB	DD		C	Screw(4×10)	ﾋﾞｽ
9	MHNG−0221FCZZ	AT	EZ	N	C	OC hinge L	OC ﾋﾝｼﾞ L
10	PSHEZ5345FCZZ	AX	FG	N	C	OC cushion	OC ﾏｯﾄ P
11	MHNG−0222FCZZ	AT	EZ	N	C	OC hinge R	OC ﾋﾝｼﾞ R
501	CCOV−0243FC31	BL	HL	N	E	OC cover unit(Without No.8,9,10,11)	OC ｶﾊﾞｰﾕﾆｯﾄ
	(Unit)						
901	CCOV−0243DS51	BR	LX	N	E	OC cover unit	OC ｶﾊﾞｰﾕﾆｯﾄ

3 OC ｶﾊﾞｰﾕﾆｯﾄ (OC cover unit)[MX-2300G,MX-2700G]

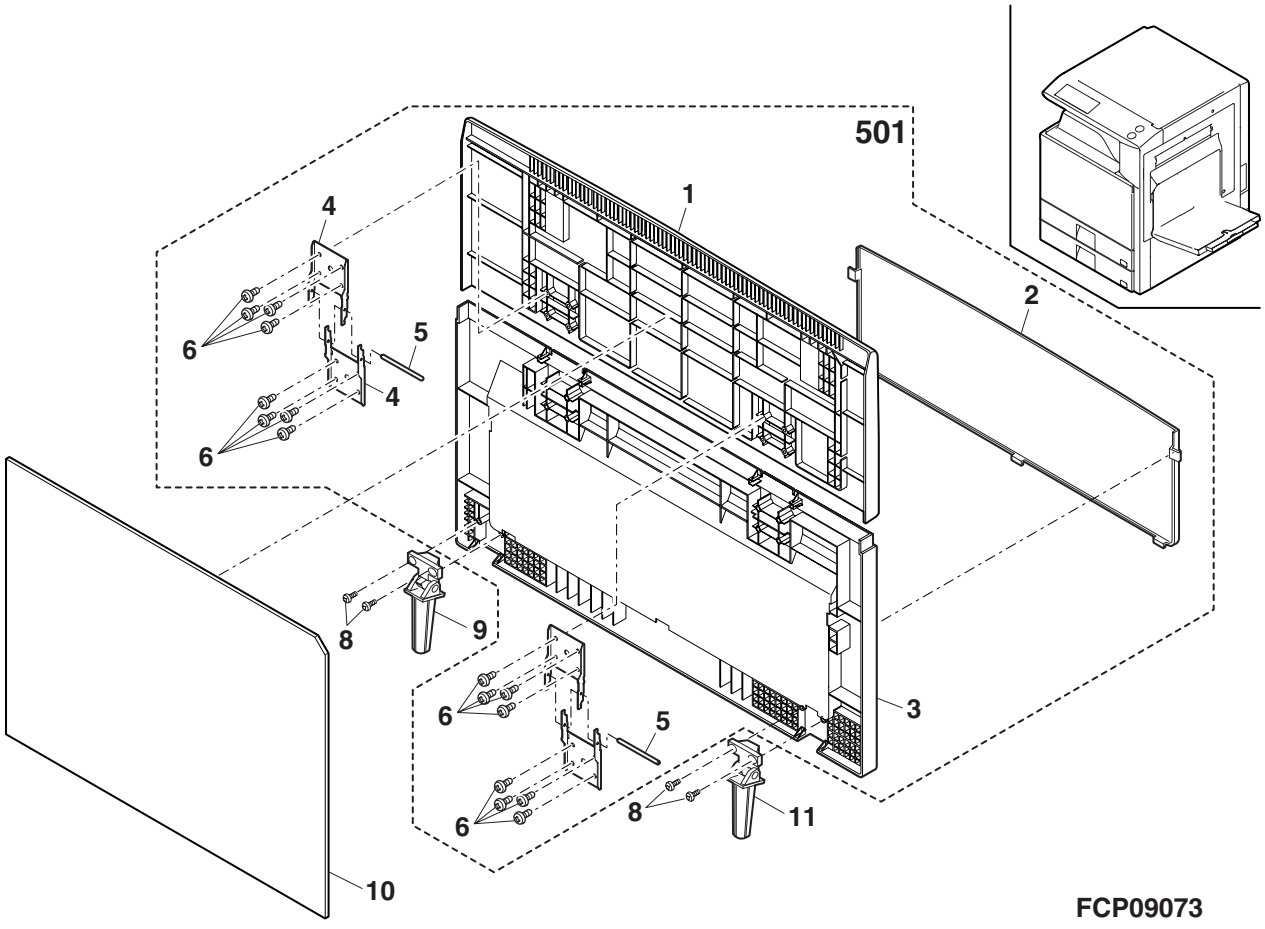

4 原稿検知ﾕﾆｯﾄ (Document detect unit)

NO.	PARTS CODE	PRICE RANK Ex.	PRICE RANK Ja.	NEW MARK	PART RANK	DESCRIPTION	
1	NSFTZ1805FCPZ	AM	EG	N	C	Document detect fulcrum shaft	原稿検知支点軸
2	XRESP30−06000	AA	DD		C	E ring(E3)	Eﾘﾝｸﾞ
3	MSPRT1563FCZZ	AC	DD		C	Document detect spring	原稿検知ｽﾌﾟﾘﾝｸﾞ
4	XBPS730P06KS0	AB	DD		C	Screw(3×6KS)	ﾋﾞｽ
5	MARMP0148FCZ3	AK	DX	N	C	Document detect arm lower	原稿検知ｱｰﾑ下
6	PSLDP0183FCZZ	AD	DJ		C	Document detect shading plate N	原稿検知遮光板 N
8	LHLDZ1085FCZ3	AE	DJ	N	C	Document detect fulcrum holder	原稿検知支点ﾎﾙﾀﾞｰ
9	LBSHZ0364FCZZ	AB	DJ	N	C	Original detect bush	原稿検知ﾌﾞｯｼｭ
10	MARMP0147FCZ3	AK	DX	N	C	Document detect arm upper	原稿検知ｱｰﾑ上
11	XEPS730P05000	AA	DD		C	Screw(3×5)	ﾋﾞｽ
12	GCAB−1100FCZZ	BP	EZ	N	D	Top cabinet rear	上ｷｬﾋﾞ後
13	XEBS730P08000	AC	DD		C	Screw(3×8)	ﾋﾞｽ
14	CARMP0147DS54	AZ	FQ	N	E	Original detector luminescence unit	原稿検知発光ﾕﾆｯﾄ

4 原稿検知ﾕﾆｯﾄ (Document detect unit)

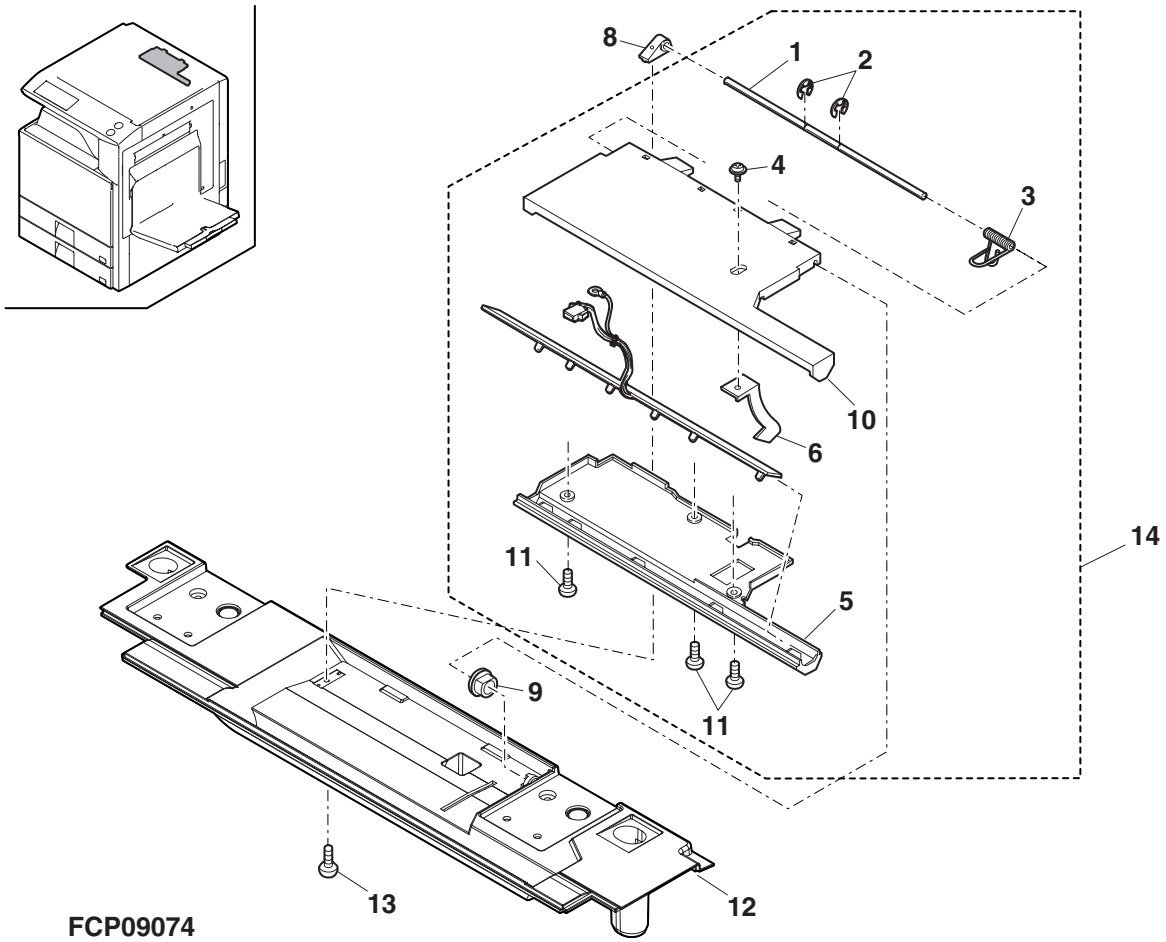

5 操作部 (Operation unit)

NO.	PARTS CODE	PRICE RANK Ex.	PRICE RANK Ja.	NEW MARK	PART RANK	DESCRIPTION
1	CFiLW0302FC01	AR	EQ	N	D	Operation filter [MX-2300FG,MX-2700FG](Japan only) 操作ﾌｨﾙﾀｰ
	CFiLW0302FC03	AR	EQ	N	D	Operation filter [MX-2300G,MX-2700G](Japan only) 操作ﾌｨﾙﾀｰ
	CFiLW0302FC02	AR	EQ	N	D	Operation filter [MX-2300G/N,MX-2700G/N](Except Japan) 操作ﾌｨﾙﾀｰ
2	PSHEZ5391FCZZ	AC	DJ	N	C	OP filter fixing sheet A 操作ﾌｨﾙﾀｰ取付ｼｰﾄ A
3	PSHEZ5392FCZZ	AB	DJ	N	C	OP filter fixing sheet B 操作ﾌｨﾙﾀｰ取付ｼｰﾄ B
4	CPNLC0261FC01	AX	FG	N	C	Operation panel [MX-2300FG,MX-2700FG](Japan only) 操作ﾊﾟﾈﾙ
	CPNLC0261FC03	AX	FG	N	C	Operation panel [MX-2300G,MX-2700G](Japan only) 操作ﾊﾟﾈﾙ
	CPNLC0261FC02	AW	FG	N	C	Operation panel [MX-2300G/N,MX-2700G/N](Except Japan) 操作ﾊﾟﾈﾙ
5	PLNS-0083FCZZ	AC	DJ	N	B	LCD lens A LED 用ﾚﾝｽﾞ A
6	JBTN-0277FCZZ	AH	DX	N	C	Switch key 切替ｷｰ
7	CBTN-0274FC01	AM	EG	N	C	10 key ﾃﾝｷｰ
8	CBTN-0275FC01	AE	DJ	N	C	CA key [MX-2300G/FG,MX-2700G/FG](Japan only) CA ｷｰ
	CBTN-0275FC02	AE	DJ	N	C	CA key [MX-2300N,MX-2700N](Except Japan) CA ｷｰ
9	CBTN-0276FC01	AE	DJ	N	C	Stop key ｽﾄｯﾌﾟｷｰ
10	PLNS-0084FCZZ	AC	DJ	N	B	LCD lens B LED 用ﾚﾝｽﾞ B
11	CBTN-0279FC01	AH	DX	N	C	Power supply switch key 電源ｽｲｯﾁｷｰ
12	CBTN-0278FC01	AH	DX	N	C	Power saving mode key 節電ﾓｰﾄﾞｷｰ
13	CFiLW0303FC01	AE	DS	N	D	Copy key ring ｺﾋﾟｰｷｰﾘﾝｸﾞ
14	CBTN-0272FC01	AR	EQ	N	C	Color copy key ｶﾗｰｺﾋﾟｰｷｰ
15	CBTN-0272FC02	AL	EB	N	C	Monochrome copy key 白黒ｺﾋﾟｰｷｰ
16	CPWBF1658FC31	AQ	EQ	N	E	Power switch PWB 電源ｽｲｯﾁ基板
17	XEBS730P08000	AC	DD		C	Screw(3×8) ﾋﾞｽ
18	DHAi-3747FCZZ	AD	DJ	N	C	PSW harness PSW ﾊｰﾈｽ
21	PSHEZ4906FCZZ	AC	DJ		C	Touch panel sheet ﾀｯﾁﾊﾟﾈﾙｼｰﾄ
22	LHLDZ1645FCZZ	AK	DX	N	C	LCD holder A LCD ﾎﾙﾀﾞｰ A
24	QCNW-0230FCZZ	AF	DS	N	C	LCD-P FFC LCD-P FFC
25	LHLDZ1646FCZZ	AH	DX	N	C	LCD holder B LCD ﾎﾙﾀﾞｰ B
26	CPWBF1677FC31	AY	FQ	N	E	LCD inverter PWB LCD ｲﾝﾊﾞｰﾀｰ基板
28	DHAi-3748FCZZ	AD	DJ	N	C	LCD inverter harness LCD ｲﾝﾊﾞｰﾀｰﾊｰﾈｽ
29	MSPRP3009FCZZ	AD	DJ		C	LCD earth plate LCD 用ｱｰｽ板
30	CPWBN1659FCE1	AZ	FX	N	E	LVDS PWB LVDS 基板
32	XHBS730P06000	AC	DD		C	Screw(3×6) ﾋﾞｽ
	(Unit)					
901	CPNLC0261DS51	CC	TZ	N	E	Operation panel unit [MX-2300FG,MX-2700FG](Japan only) 操作ﾊﾟﾈﾙﾕﾆｯﾄ
	CPNLC0261DS53	CC	TZ	N	E	Operation panel unit [MX-2300G,MX-2700G](Japan only) 操作ﾊﾟﾈﾙﾕﾆｯﾄ
	CPNLC0261DS52	CC	TZ	N	E	Operation panel unit [MX-2300G/N,MX-2700G/N](Except Japan) 操作ﾊﾟﾈﾙﾕﾆｯﾄ

5 操作部 (Operation unit)

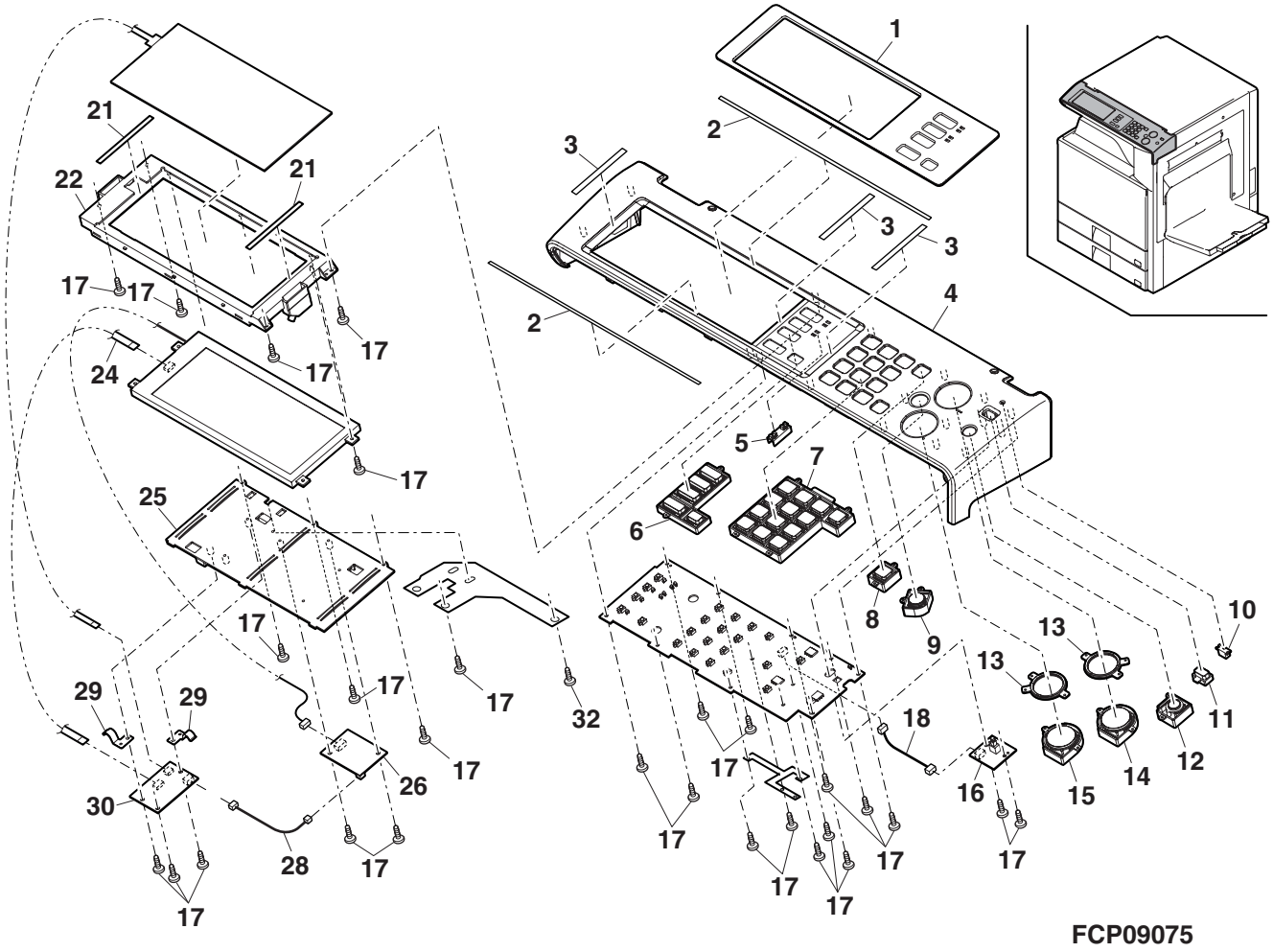

6 ｽｷｬﾅｰﾕﾆｯﾄ 1(Scanner unit 1)

NO.	PARTS CODE	PRICE RANK Ex.	PRICE RANK Ja.	NEW MARK	PART RANK	DESCRIPTION	
1	XHBS730P05000	AA	DD		C	Screw(3×5)	ﾋﾞｽ
2	XHBS730P04000	AA	DD		C	Screw(3×4)	ﾋﾞｽ
3	DHAi-3738FCZ2	BE	GN	N	C	CCD-F harness	CCD-F ﾊｰﾈｽ 1
5	PBOX-0151FCZZ	AK	EB	N	D	Dark box	暗箱
6	PSHEZ5363FCZZ	AB	DJ	N	C	CL lead protect sheet	CL ﾘｰﾄﾞ保護ﾏｲﾗｰ
7	PCOVP1864FCZZ	AG	DX	N	D	FFC cover	FFC ｶﾊﾞｰ
8	CPLTM6526DS51	CA	TV	N	E	CCD unit	CCD ﾕﾆｯﾄ
9	XHBS730P08KS0	AC	DD		C	Screw(3×8KS)	ﾋﾞｽ
10	DHAi-3751FCZ1	AR	EQ	N	C	RSPF interface harness	本体 RSPF 中継ﾊｰﾈｽ
11	LPLTM6668FCZZ	AE	DJ	N	C	SPF connector fixing plate	SPF ｺﾈｸﾀｰ取付板
12	XHBS740P06000	AA	DD		C	Screw(4×6)	ﾋﾞｽ
14	PCOVP1857FCZZ	AL	EB	N	D	SCN PWB cover	SCN 基板ｶﾊﾞｰ
15	XHBS730P06000	AC	DD		C	Screw(3×6)	ﾋﾞｽ
16	LHLDW0825FCZZ	AB	DD		C	Wire saddle	ﾜｲﾔｰｻﾄﾞﾙ
17	LHLDW0595FCZZ	AC	DD	N	C	Edge saddle(EDS2)	ｴｯｼﾞｻﾄﾞﾙ
18	LPLTM6523FCZZ	AF	DS	N	C	OC reinforce plate	OC 補強板
19	LPLTM6522FCZZ	AK	DX	N	C	OC fixing plate	OC 取付板
20	LPLTM6495FCZZ	AC	DJ	N	C	OC hinge fixing plate	OC ﾋﾝｼﾞ取付板
21	DHAi-3813FCZ2	AH	DX	N	C	SCN-WH harness 2	SCN-WH ﾊｰﾈｽ 2
22	XHBS740P08000	AA	DD		C	Screw(4×8)	ﾋﾞｽ
23	LBSHC0096FCZZ	AA	DD		C	Edging(CE-016 L=30)	ｴｯｼﾞﾝｸﾞ
24	PGiDM2111FCZZ	AC	DJ	N	C	Sensor guide	ｾﾝｻｰｶﾞｲﾄﾞ
25	VHPLG217L5S-1	AM	EG	N	B	Photo sensor(LG217L-5S)	ﾌｫﾄｾﾝｻｰ
26	XHBS730P08KS0	AC	DD		C	Screw(3×8KS)	ﾋﾞｽ
27	LBNDJ0005FCZZ	AB	DD		C	Clamp	ｸﾗﾝﾌﾟ
28	XBBS730P06000	AC	DD		C	Screw(3×6) [MX-2300G,MX-2700G]	ﾋﾞｽ
29	PHOG-2066SC15	AA	DD		C	Edge protect(CE-012 15mm)	ｴｯｼﾞ保護材
31	VHPLG217L5A-1	AM	EG	N	B	Photo sensor(LG217L-5A)	ﾌｫﾄｾﾝｻｰ
32	XBBS740P14000	AB	DD		C	Screw(4×14)	ﾋﾞｽ
33	PSHEZ5362FCZZ	AC	DJ		C	FCC protect sheet	FCC 保護ﾏｲﾗｰ
34	PSHEZ5364FCZZ	AC	DJ		C	CCD harness protect sheet	CCD ﾊｰﾈｽ保護ﾏｲﾗｰ
35	PSHEZ5365FCZZ	AC	DJ		C	CCD harness under sheet	CCD ﾊｰﾈｽ下ﾏｲﾗｰ
36	DHAi-3744FCZZ	AF	DS	N	C	MHPS harness	MHPS ﾊｰﾈｽ
	(Unit)						
901	DUNT-7439DS11	CL	UW	N	E	Scanner unit [MX-2300G,MX-2700G] (Include Block [1]-16,[4],[7],[8])	ｽｷｬﾅｰﾕﾆｯﾄ
	DUNT-7439DSZZ	CL	UW	N	E	Scanner unit [MX-2300FG/N,MX-2700FG/N] (Include Block [1]-16,[4],[7],[8])	ｽｷｬﾅｰﾕﾆｯﾄ

6 ｽｷｬﾅｰﾕﾆｯﾄ 1(Scanner unit 1)

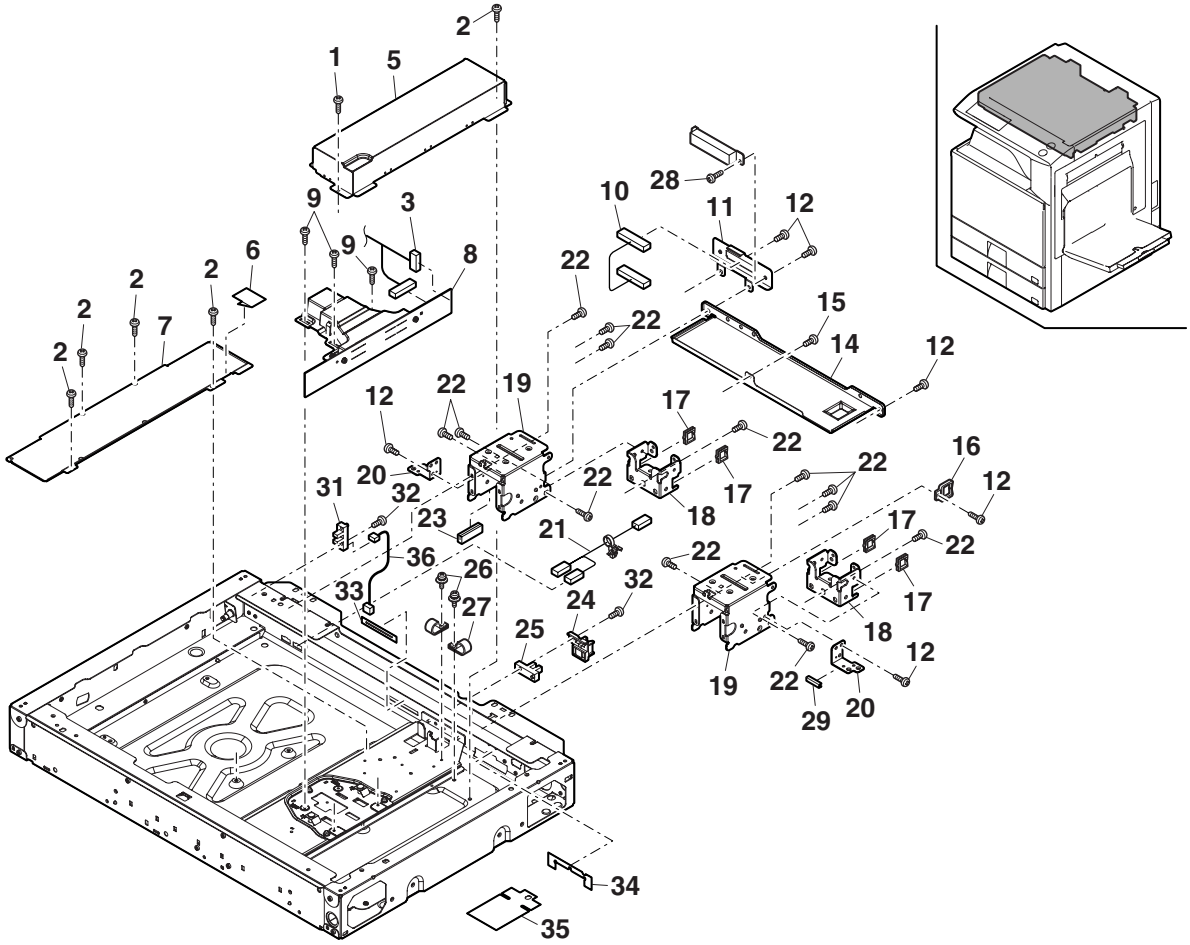

FCP09076

7 ｽｷｬﾅｰﾕﾆｯﾄ 2(Scanner unit 2)

NO.	PARTS CODE	PRICE RANK Ex.	PRICE RANK Ja.	NEW MARK	PART RANK	DESCRIPTION	
1	PWiR-0191FCP1	AN	EG	N	C	MB wire R	MB ﾜｲﾔｰ R
2	CHLDZ1663FC31	BC	GJ	N	E	2nd,3rd mirror unit	2nd,3rd ﾐﾗｰﾕﾆｯﾄ
3	PGiDM1890FCZZ	AC	DJ		C	CL guide	CL ｶﾞｲﾄﾞ
4	XBBS740P06000	AA	DD		C	Screw(4×6)	ﾋﾞｽ
5	LHLDZ1505FCZZ	AC	DJ		C	Wire holder	ﾜｲﾔｰﾎﾙﾀﾞｰ
6	CDAiU0619DS60	BP	LP	N	E	Lamp unit	ﾗﾝﾌﾟﾕﾆｯﾄ
7	NPLYZ0401FCZZ	BB	GD		C	Pulley(50T)	ﾌﾟｰﾘｰ
8	NBLTH0440FCZZ	AS	EQ	N	B	Winder drive belt	巻取り駆動ﾍﾞﾙﾄ
9	LX-BZ0049FCPZ	AB	DD		C	Screw(4×6)	ﾋﾞｽ
10	NPLYZ0031QSZZ	AL	EB		C	Winder pulley	巻取りﾌﾟｰﾘｰ
11	NSFTZ2694FCPZ	AY	FQ	N	C	Winder drive shaft	巻取り駆動軸
12	PWiR-0192FCP1	AN	EG	N	C	MB wire F	MB ﾜｲﾔｰ F
13	XHBS730P06000	AC	DD		C	Screw(3×6)	ﾋﾞｽ
15	MSPRT3388FCZZ	AC	DJ	N	C	Mirror motor spring	ﾐﾗｰﾓｰﾀｰｽﾌﾟﾘﾝｸﾞ
16	CPLTM6520FC01	AH	DX	N	C	Mirror motor fixing plate	ﾐﾗｰﾓｰﾀｰ取付板
17	NGERH1647FCZZ	AE	DJ	N	C	Mirror motor idle gear	ﾐﾗｰﾓｰﾀｰｱｲﾄﾞﾙｷﾞﾔ
18	XRESP70-08000	AA	DD		C	E ring(E7)	E ﾘﾝｸﾞ
19	VHi28F081L66C	AW	FG	N	B	Scanner flash PWB(28F081L66C)	SCN ﾌﾗｯｼｭ基板
20	CPWBX1713DS518	CD	UD	N	E	Scanner PWB [MX-2700G/FG/N]	ｽｷｬﾅ基板
	CPWBX1713DS548	CD	UD	N	E	Scanner PWB [MX-2300G/FG/N]	ｽｷｬﾅ基板
22	LPLTM6524FCZZ	AK	EB	N	C	Scanner PWB fixing plate	ｽｷｬﾅ基板取付板
23	NBRGY0466FCZZ	AK	EB		C	Bearing(φ8-16)	軸受
24	LFiX-0537FCZZ	AD	DJ		C	Harness fixer	ﾊｰﾈｽ押え
25	LDAiU0610FCZZ	AE	DS		D	Harness fixing base	ﾊｰﾈｽ押えﾍﾞｰｽ
26	XHBS740P06000	AA	DD		C	Screw(4×6)	ﾋﾞｽ
28	PGUMS0283FCZ1	AA	DJ		C	Table glass gum	ﾃｰﾌﾞﾙｶﾞﾗｽｺﾞﾑ
29	XHBS740P08000	AA	DD		C	Screw(4×8)	ﾋﾞｽ
30	NPLYZ0006QSZZ	AD	DJ		C	L pulley	L ﾌﾟｰﾘｰ
31	PSHEZ4836FCZZ	AB	DJ		C	Screw protect sheet	ﾋﾞｽ保護ｼｰﾄ
32	NPLYZ0005QSZZ	AG	DX		C	Pulley	定ﾌﾟｰﾘｰ
33	LRALM0225FCZZ	AG	DS	N	A	MB-B rail R	MB-B ﾚｰﾙ R
34	LRALM0226FCZZ	AE	DS	N	A	MB-B rail F	MB-B ﾚｰﾙ F
35	LHLDZ1381FCZZ	AL	EB		C	ORS PWB holder	受光基板ﾎﾙﾀﾞｰ
36	CPWBF1454FCE2	BN	FQ		E	ORS PWB	受光基板
37	XEPS740P06000	AB	DD		C	Screw(4×6)	ﾋﾞｽ
38	LX-BZ0324FCPZ	AA	DD		C	Screw	ﾋﾞｽ
39	PSHEP5301FCZZ	AB	DJ		C	Harness protect sheet	ﾊｰﾈｽ保護ｼｰﾄ
40	LBNDJ0071FCZZ	AC	DJ		C	Band(RSG-100)	ﾊﾞﾝﾄﾞ
41	LX-BZ0004QSPZ	AB	DD		C	Red screw(3×6)	赤ﾋﾞｽ
42	XBTS740P06000	AA	DD		C	Screw(4×6)	ﾋﾞｽ
43	DHAi-3658FCZZ	AE	DS		C	ORS PD harness	ORS PD ﾊｰﾈｽ N
	(Unit)						
901	DUNT-7439DS11	CL	UW	N	E	Scanner unit [MX-2300G,MX-2700G] (Include Block [1]-16,[4],[6],[8])	ｽｷｬﾅｰﾕﾆｯﾄ
	DUNT-7439DSZZ	CL	UW	N	E	Scanner unit [MX-2300FG/N,MX-2700FG/N] (Include Block [1]-16,[4],[6],[8])	ｽｷｬﾅｰﾕﾆｯﾄ

7 ｽｷｬﾅｰﾕﾆｯﾄ 2(Scanner unit 2)

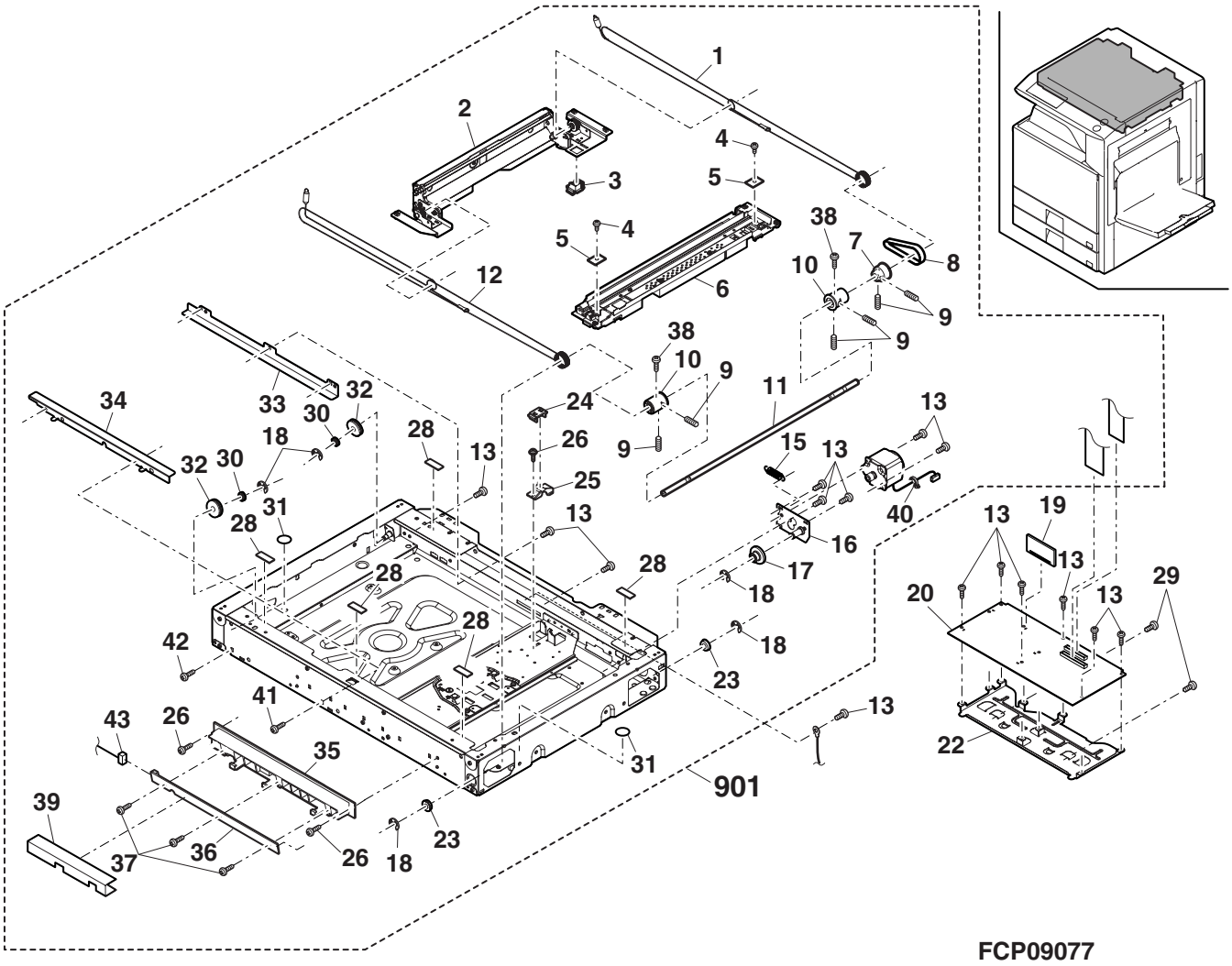

8 ﾗﾝﾌﾟﾕﾆｯﾄ (Lamp unit)

NO.	PARTS CODE	PRICE RANK Ex.	PRICE RANK Ja.	NEW MARK	PART RANK	DESCRIPTION	
1	RLMPD0703FCZZ	BD	GN	N	B	Lamp	ｷｾﾉﾝﾗﾝﾌﾟ WCR
2	XEBS730P08000	AC	DD		C	Screw(3×8)	ﾋﾞｽ
3	XBBS730P12000	AA	DD	N	C	Screw(3×12)	ﾋﾞｽ
4	MSPRP2825FCZZ	AC	DJ		C	Mirror spring	ﾐﾗｰｽﾌﾟﾘﾝｸﾞ
5	TLABZ4335FCZZ	AB	DJ		D	High voltage caution label N	高圧注意ﾗﾍﾞﾙ N
6	PREFL0173FCZZ	AN	EQ	N	C	Reflector	ﾘﾌﾚｸﾀｰ
7	MSLi-0138FCZZ	AC	DJ		C	Slider	ｽﾗｲﾀﾞｰ
8	PCUSU0203FCZZ	AE	DS		C	Cushion	防振ｸｯｼｮﾝ
9	LSTYM0261FCZZ	AB	DJ		C	Wire support plate	ﾜｲﾔｰ支持板
10	LDAiU0619FCZ1	AS	EQ		D	Lamp base	ﾗﾝﾌﾟﾍﾞｰｽ
12	PMiR-0164FCZZ	AP	EQ		B	1st mirror	第 1 ﾐﾗｰ
13	QCNW-0227FCZ1	AE	DJ	N	C	SCN-LAMP FFC	SCN-ﾗﾝﾌﾟ FFC
14	LFiX-0545FCZZ	AC	DJ		C	CL lead harness fixer	CL ﾘｰﾄﾞﾊｰﾈｽ押え
15	CPWBF1678FC31	BD	GN	N	E	CL inverter	CL ｲﾝﾊﾞｰﾀｰ
16	PCUSF0334FCZZ	AP	EQ		C	Mirror cushion	ﾐﾗｰｸｯｼｮﾝ
17	PSHEP5507FCZZ	AC	DJ	N	C	Lamp holder sheet	ﾗﾝﾌﾟﾎﾙﾀﾞｰﾏｲﾗｰ
	(Unit)						
901	CDAiU0619DS60	BP	LP	N	E	Lamp unit	ﾗﾝﾌﾟﾕﾆｯﾄ

8 ﾗﾝﾌﾟﾕﾆｯﾄ (Lamp unit)

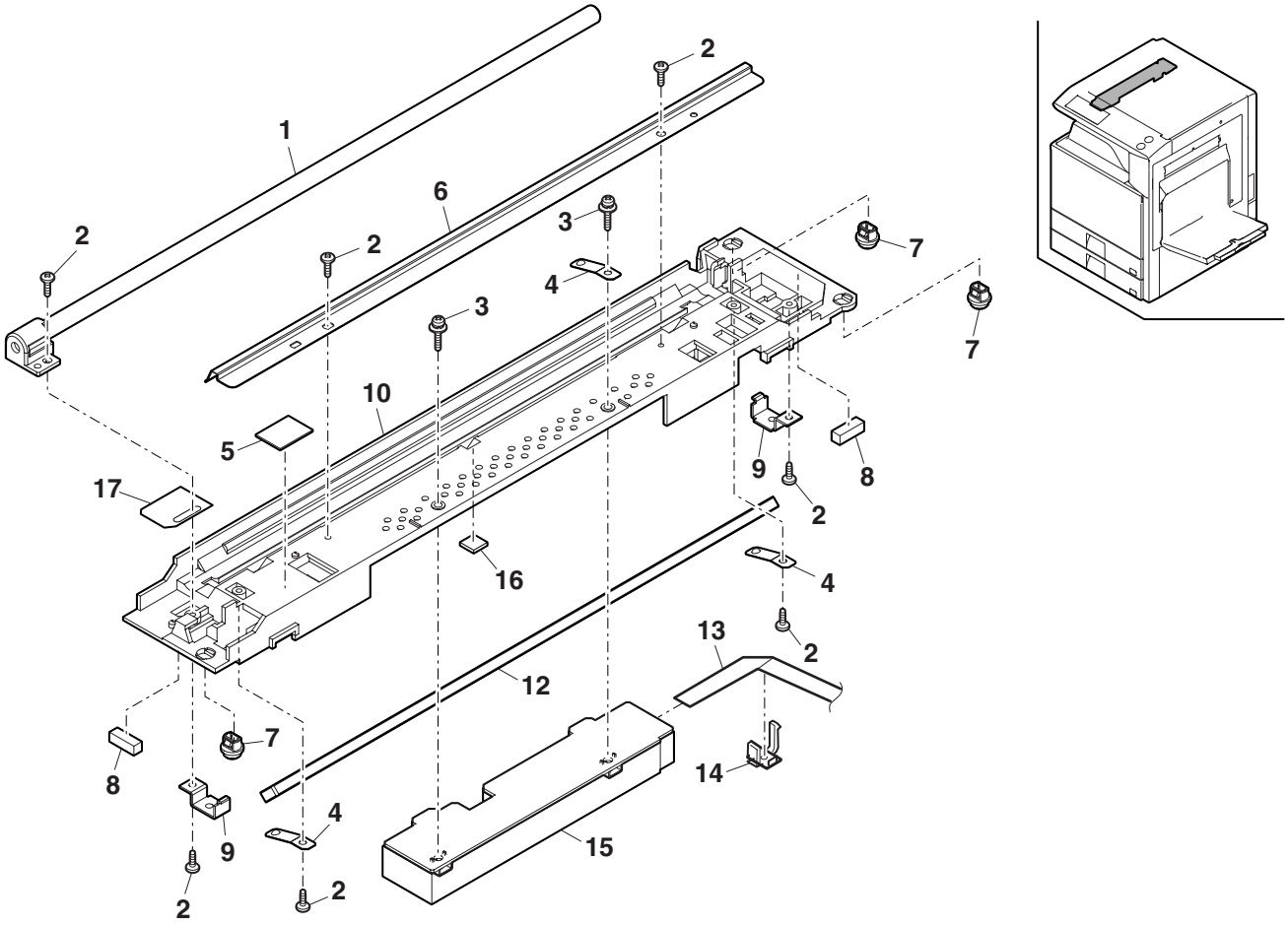

FCP09078

9 500 ｶｾｯﾄ (500 cassette)

NO.	PARTS CODE	PRICE RANK Ex.	PRICE RANK Ja.	NEW MARK	PART RANK	DESCRIPTION	
1	JHNDP0174FCZZ	AU	FG	N	C	Cassette handle	ｶｾｯﾄ取手
2	XEBS730P08000	AC	DD		C	Screw(3×8)	ﾋﾞｽ
3	GCOV-0238FCZZ	AH	DX	N	D	Cassette handle cover	ｶｾｯﾄ取手ｶﾊﾞｰ
4	PSHEZ5399FCZZ	AE	DS	N	C	Cassette handle sheet	ｶｾｯﾄ取手ｼｰﾄ
5	LPLTM6443FCZZ	AS	EQ	N	C	Rotation plate	回転板
6	LPLTP6439FCZZ	AE	DS	N	C	Rear edge plate	後端板
7	TCADZ6029FCZZ	AD	DJ	N	D	Size display label (Japan)	ｻｲｽﾞ表示ﾗﾍﾞﾙ
	TCADZ6027FCZZ	AD	DJ	N	D	Size display label (Inch Seires)	ｻｲｽﾞ表示ﾗﾍﾞﾙ
8	PSHEZ5397FCZZ	AD	DJ	N	C	Rotation sheet R	回転ｼｰﾄｸﾘｰﾝ R
10	LPLTP6436FCZ1	AN	EQ	N	C	500 regulation plate R	500 規制板 R
12	PTPE-0282FCZZ	AA	DJ	N	C	Side plate tape R	側板ﾃｰﾌﾟ R
13	LPLTM6445FCZZ	AB	DJ	N	C	Regulation plate	規制板
15	XEBS740P12000	AA	DD		C	Screw(4×12)	ﾋﾞｽ
16	LPLTP6440FCZZ	AD	DJ	N	C	OC adjust plate	OC 調整板
17	NGERH1609FCZZ	AC	DJ	N	C	Gear(18T)	ｷﾞｱ
18	MSPRC3400FCZZ	AC	DJ	N	C	Cassette earth spring	ｶｾｯﾄｱｰｽｽﾌﾟﾘﾝｸﾞ
19	PSHEZ5388FCZZ	AC	DJ	N	C	Rotation plate silencer	回転板消音材
20	GCASP0177FCZZ	BA	FX	N	D	500 cassette	500 ｶｾｯﾄ
21	MLEVP0923FCZZ	AC	DJ	N	C	Remain actuator	残量ｱｸﾁｪｰﾀｰ
22	MSPRD3419FCZZ	AB	DJ	N	C	Remain actuator spring	残量ｱｸﾁｪｰﾀｰｽﾌﾟﾘﾝｸﾞ
23	XEBS740P06000	AA	DD		C	Screw(4×6)	ﾋﾞｽ
24	XRESP70-08000	AA	DD		C	E ring(E7)	E ﾘﾝｸﾞ
25	PSHEZ5387FCZZ	AD	DJ	N	C	Multi separate front sheet R	ﾏﾙﾁ分離前ｼｰﾄ R
26	CPLTM6444DS51	AS	EZ	N	C	Lift plate	ﾘﾌﾄﾌﾟﾚｰﾄ
27	MSPRD3418FCZZ	AF	DS	N	C	Lift plate silence spring	ﾘﾌﾄﾌﾟﾚｰﾄ消音ｽﾌﾟﾘﾝｸﾞ
28	LX-BZ1023FCZZ	AD	DJ	N	C	Step screw	誤挿入防止段ﾋﾞｽ
33	LPLTP6437FCZZ	AQ	EQ	N	C	500 regulation plate F	500 規制板 F
34	LHLDZ1618FCZZ	AC	DJ	N	C	Rear edge holder	後端板ﾎﾙﾀﾞｰ
35	LX-BZ0531FCPZ	AB	DD	N	C	Screw	ﾋﾞｽ
36	LHLDW1226FCZZ	AB	DJ		C	Turn fastener	ﾀｰﾝﾌｧｽﾅｰ
37	TLABZ5148FCZZ	AC	DJ		D	Energy star label (Except Europe)	ｴﾅｼﾞｰｽﾀｰﾗﾍﾞﾙ
501	CCASP0177DS51	BG	GT	N	E	500 cassette	500 ｶｾｯﾄ

9 500 ｶｾｯﾄ (500 cassette)

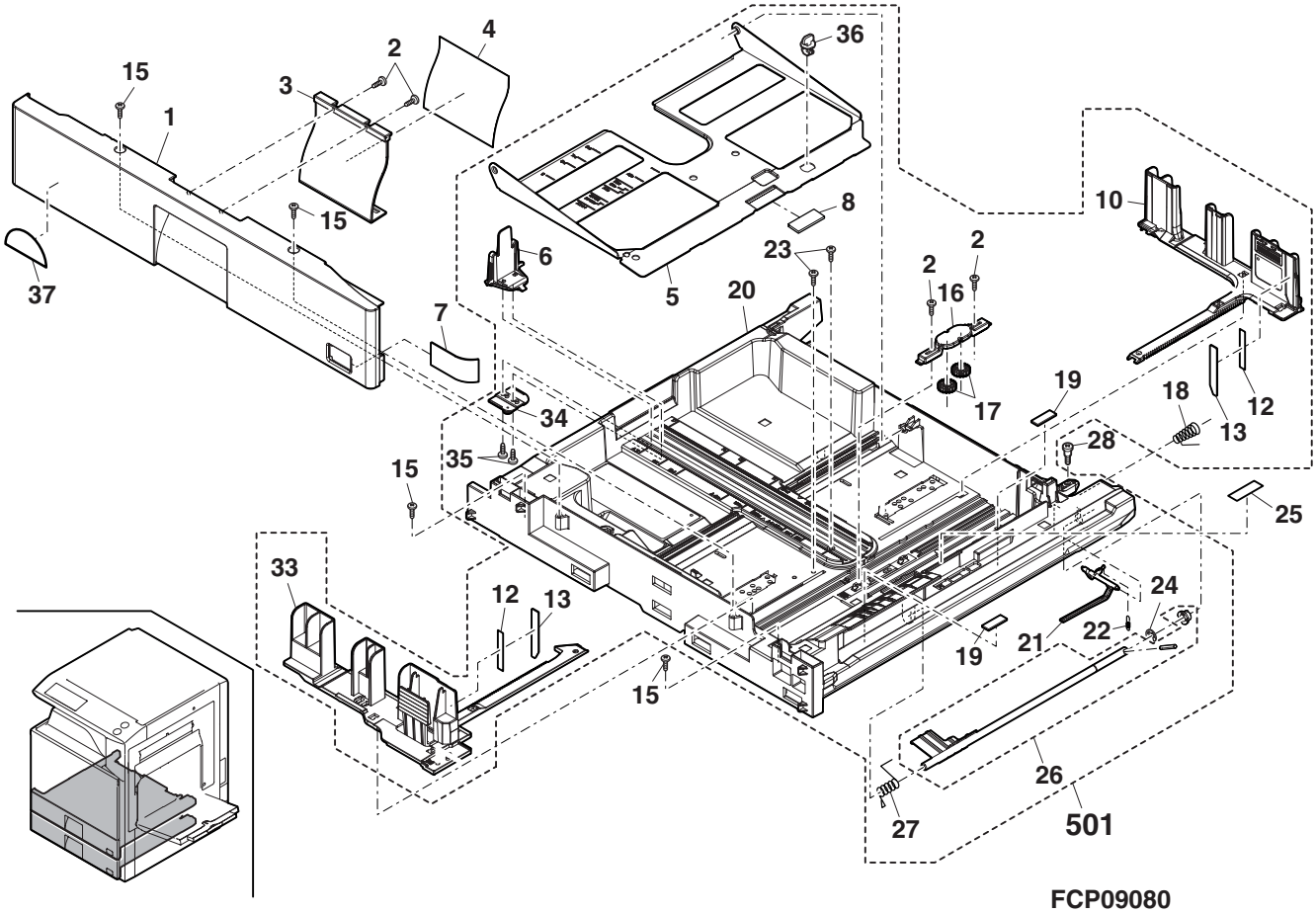

10 ｶｾｯﾄ給紙ﾕﾆｯﾄ 1(Cassette paper feed unit 1)

NO.	PARTS CODE	PRICE RANK Ex.	PRICE RANK Ja.	NEW MARK	PART RANK	DESCRIPTION	
1	XRESP50−06000	AA	DD		C	E ring(E5)	Eﾘﾝｸﾞ
2	NBRGM0096FCZ1	AC	DJ		C	Bearing	軸受
3	PGiDM2123FCZZ	AN	EQ	N	C	PF lower PG (1CS)	給紙下 PG
	PGiDM2156FCZZ	AN	EQ	N	C	PF upper PG 2 (2CS)	給紙下 PG2
4	NRŌLR1466FCZ1	AN	DX		A	PF separate roller	給紙分離ﾛｰﾗｰ
5	XEBS740P10000	AA	DD		C	Screw(4×10)	ﾋﾞｽ
6	PCLC−0316FCP1	AP	EQ	N	B	Separate torque limiter	分離ﾄﾙｸﾘﾐｯﾀｰ
7	CSFTZ2929FC31	AU	EZ	N	E	Separate shaft	分離軸
11	MSPRC3398FCZZ	AC	DJ	N	C	Separate pressure spring	分離圧接ｽﾌﾟﾘﾝｸﾞ
12	NRŌLP1516FCZZ	AA	DJ	N	C	Transport follower roller	搬送従動ﾛｰﾗｰ
13	NSFTZ2949FCZZ	AG	DX	N	C	Right door follower shaft	右ﾄﾞｱ従動軸
14	MSPRC3399FCZZ	AC	DJ	N	C	Transport follower spring	搬送従動ｽﾌﾟﾘﾝｸﾞ
15	LPLTP6484FCZZ	AC	DJ	N	C	Separate release plate	分離圧解板
16	MSPRT2973FCZZ	AD	DJ		C	Multi separate release spring	ﾏﾙﾁ分離圧解ｽﾌﾟﾘﾝｸﾞ
17	LPLTM6515FCZZ	AH	DX	N	C	PF lower PG reinforce plate	給紙下 PG 補強板
18	XHBS740P08000	AA	DD		C	Screw(4×8)	ﾋﾞｽ
19	MSPRT3431FCZZ	AC	DJ	N	C	Pick pressure spring	ﾋﾟｯｸ加圧ｽﾌﾟﾘﾝｸﾞ

11 ｶｾｯﾄ給紙ﾕﾆｯﾄ 2(Cassette paper feed unit 2)

NO.	PARTS CODE	PRICE RANK Ex.	PRICE RANK Ja.	NEW MARK	PART RANK	DESCRIPTION	
1	LPLTM6514FCZZ	AN	EQ	N	C	PF upper PG reinforce plate	給紙上 PG 補強板
2	XEBS730P08000	AC	DD		C	Screw(3×8)	ﾋﾞｽ
3	DHAi−3713FCZZ	AH	DX	N	C	Paper feed harness (1CS)	給紙ﾊｰﾈｽ
	DHAi−3714FCZZ	AH	DX	N	C	Paper feed harness (2CS)	給紙ﾊｰﾈｽ
7	XHBS740P08000	AA	DD		C	Screw(4×8)	ﾋﾞｽ
8	NRŌLR1524FCZZ	AT	EZ	N	C	Transport roller 1	搬送ﾛｰﾗｰ 1
9	LHLDZ1678FCZZ	AB	DJ	N	C	Bearing holder	軸受ﾎﾙﾀﾞｰ
10	XEBS740P10000	AA	DD		C	Screw(4×10)	ﾋﾞｽ
11	NGERH1638FCZZ	AD	DJ	N	C	Gear(20T-P)	ｷﾞｱ
12	NPLYZ0441FCZZ	AC	DJ	N	C	Pulley(22P) (1CS)	ﾌﾟｰﾘｰ
	NPLYZ0489FCZZ	AR	EQ	N	C	Pulley (2CS)	ﾌﾟｰﾘｰ
13	LPiNS0133FCZZ	AA	DD		C	Pin(2-10)	平行ﾋﾟﾝ
14	XRESP50−06000	AA	DD		C	E ring(E5)	Eﾘﾝｸﾞ
15	NBRGM0096FCZ1	AC	DJ		C	Bearing	軸受
16	VHPGP1A71L3−1	AG	DS		B	Sensor	ｾﾝｻｰ
17	LFRM−1161FCZZ	AE	DS	N	C	Paper feed R frame (1CS)	給紙 R ﾌﾚｰﾑ
	CFRM−1191FC01	AE	DJ	N	C	Paper feed R frame 2nd (2CS)	給紙 R ﾌﾚｰﾑ
18	MSPRT3430FCZZ	AC	DJ	N	C	Pick up release lever spring	呼込圧解ﾚﾊﾞｰｽﾌﾟﾘﾝｸﾞ
19	MLEVP0947FCZZ	AD	DJ	N	C	Pick up release lever	呼込解除ﾚﾊﾞｰ
21	LPLTP5827FCZZ	AF	DS		C	Multi sensor fixing plate	ﾏﾙﾁｾﾝｻｰ取付板
23	MLEVP0949FCZZ	AC	DJ	N	C	PE actuator	PE ｱｸﾁｪｰﾀｰ
24	PGiDM2122FCZZ	AT	EZ	N	C	PF upper PG (1CS)	給紙上 PG
	PGiDM2155FCZZ	AT	EZ	N	C	PF upper PG 2 (2CS)	給紙上 PG2
25	PGiDM2126FCZZ	AH	DX	N	C	Paper feed PG-F	給紙 PG-F
26	LFRM−1154FCZZ	AE	DS	N	C	Paper feed F frame	給紙 F ﾌﾚｰﾑ
28	LHLDZ1637FCZZ	AS	EQ	N	C	Pick up holder	呼込ﾎﾙﾀﾞｰ
29	NRŌLP1351FCZZ	AG	DX		C	Follower roller	従動ﾛｰﾗｰ
30	XRESP40−06000	AA	DD		C	E ring(E4)	Eﾘﾝｸﾞ
31	LHLDZ1679FCZZ	AC	DJ	N	C	Sensor holder	ｾﾝｻｰﾎﾙﾀﾞｰ
32	MLEVP0951FCZZ	AC	DJ	N	C	PS front 2 sensor actuator	PS 前 2 ｾﾝｻｰｱｸﾁｪｰﾀｰ
33	MSPRD3420FCZZ	AB	DJ	N	C	PS front 2 actuator spring	PS 前 2 ｱｸﾁｪｰﾀｰｽﾌﾟﾘﾝｸﾞ
34	NSFTZ2927FCZZ	BT	MW	N	C	Paper feed shaft	給紙軸
35	NSFTZ2928FCZZ	AR	EQ	N	C	Pick up shaft	呼込軸
36	NPLYZ0365FCZZ	AC	DJ		C	Pick up roller pulley	呼込ﾛｰﾗｰﾌﾟｰﾘｰ
39	NBLTH0412FCZZ	AE	DJ		B	Belt(57MXL3.2)	ﾍﾞﾙﾄ
40	NRŌLR1467FCZ1	AN	DX		A	Pick up roller	呼込ﾛｰﾗｰ
41	NRŌLR1466FCZ1	AN	DX		A	PF separate roller	給紙分離ﾛｰﾗｰ

10 ｶｾｯﾄ給紙ﾕﾆｯﾄ 1(Cassette paper feed unit 1)

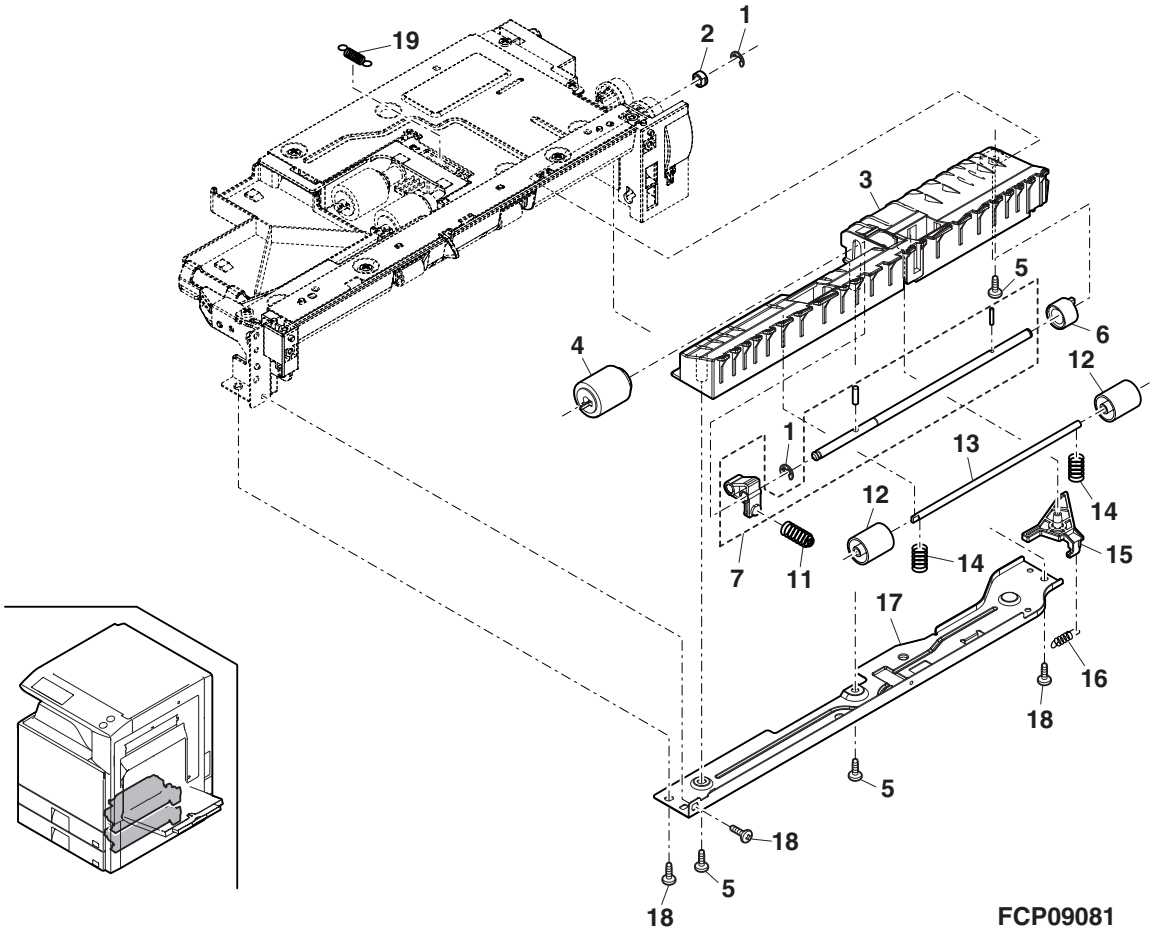

11 ｶｾｯﾄ給紙ﾕﾆｯﾄ 2(Cassette paper feed unit 2)

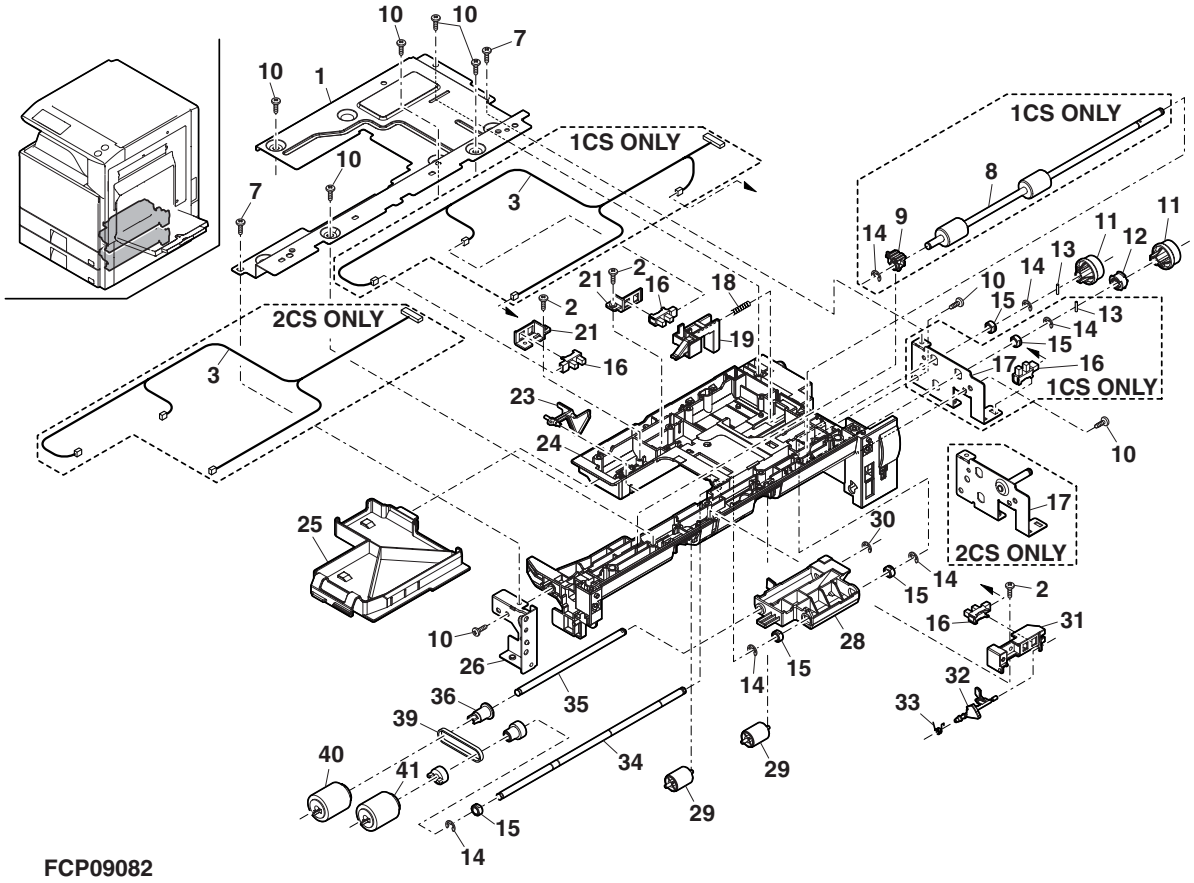

12 給紙搬送部 (Paper feed transport section)

NO.	PARTS CODE	PRICE RANK Ex.	PRICE RANK Ja.	NEW MARK	PART RANK	DESCRIPTION	
1	NBLTH0452FCZZ	AQ	EQ	N	B	PF reverse belt	給紙反転ﾍﾞﾙﾄ
2	NPLYZ0441FCZZ	AC	DJ	N	C	Pulley(22P)	ﾌﾟｰﾘｰ
3	LPiNS0133FCZZ	AA	DD		C	Pin(2-10)	平行ﾋﾟﾝ
4	XRESP50−06000	AA	DD		C	E ring(E5)	Eﾘﾝｸﾞ
5	NBRGM0096FCZ1	AC	DJ		C	Bearing	軸受
6	XEBS730P08000	AC	DD		C	Screw(3×8)	ﾋﾞｽ
7	PGiDM2127FCZZ	AP	EQ	N	C	PF reverse PG	給紙反転 PG
8	NRÖLR1525FCZZ	AT	EZ	N	A	Transport roller 2	搬送ﾛｰﾗｰ 2
9	QEARP0195FCZZ	AC	DJ	N	C	Transport earth plate	搬送ｱｰｽ板
10	NBLTH0479FCZZ	AT	EZ	N	B	Paer feed transport belt	給紙搬送ﾍﾞﾙﾄ
11	XEBS740P14000	AB	DD	N	C	Screw(4×14)	ﾋﾞｽ
12	CFRM−1155FC01	AH	DX	N	D	Transport under frame	搬送下ﾌﾚｰﾑ
13	PGiDM2124FCZZ	AL	EB	N	C	PF lower transport PG	給紙下搬送 PG
14	PGiDM2125FCZZ	AL	EB	N	C	PF movable PG lower	給紙可動 PG 下
15	LPLTM6516FCZZ	AC	DJ	N	C	Movable PG fixing plate	可動 PG 取付板
16	NBLTH0450FCZZ	AQ	EQ	N	B	Belt	ﾍﾞﾙﾄ
17	NPLYZ0457FCZZ	AC	DJ	N	C	Transport lower gear pulley	搬送下ｷﾞｱﾌﾟｰﾘｰ
18	PGiDM2113FCZZ	AL	EB	N	C	PF transport lower PG	給紙搬送下 PG
19	XEBS740P10000	AA	DD		C	Screw(4×10)	ﾋﾞｽ
20	XHBS740P08000	AA	DD		C	Screw(4×8)	ﾋﾞｽ
21	NPLYZ0489FCZZ	AR	EQ	N	C	Pulley(22P)	ﾌﾟｰﾘｰ

12 給紙搬送部 (Paper feed transport section)

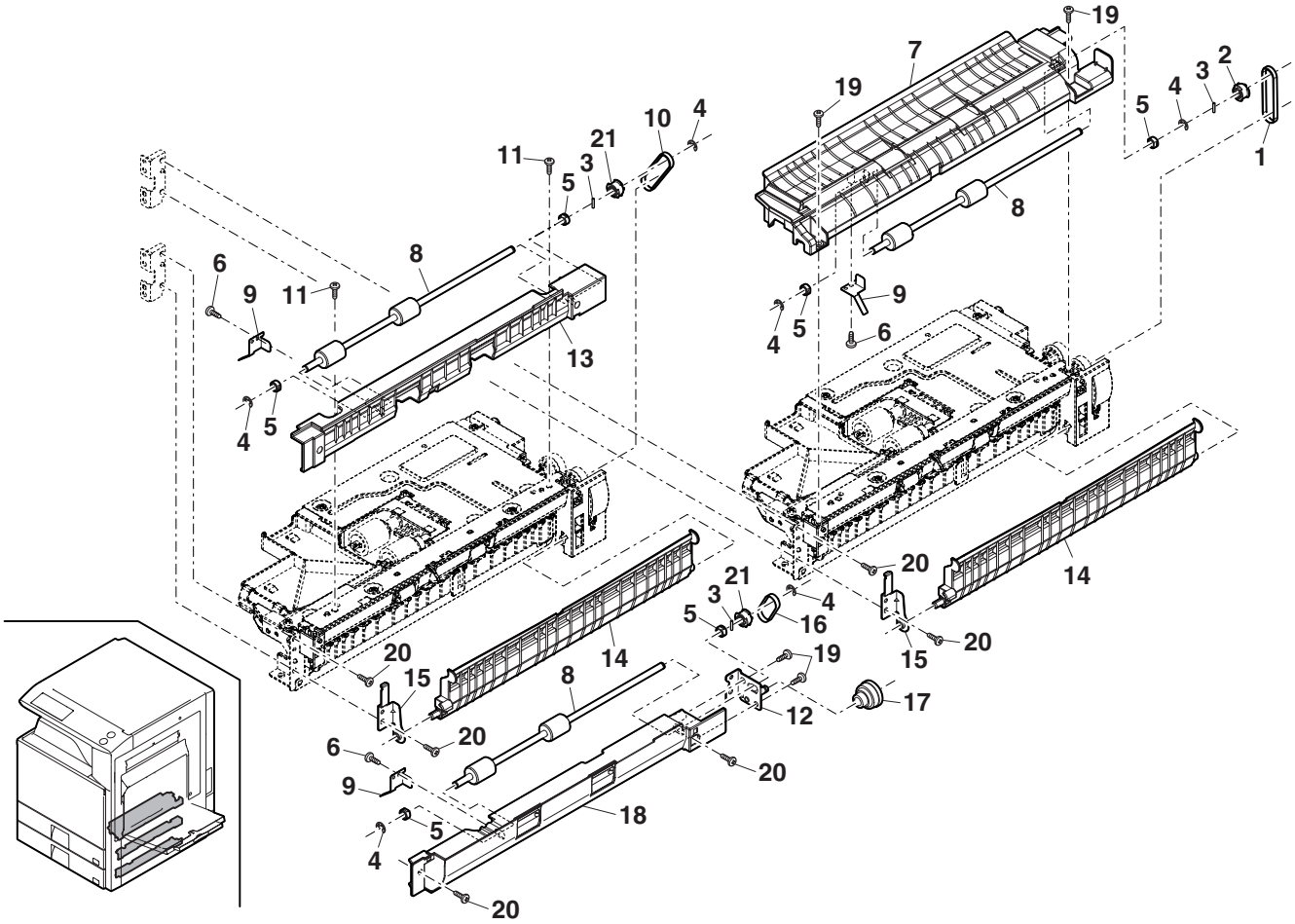

13 右下ﾄﾞｱﾕﾆｯﾄ (Right lower door unit)

NO.	PARTS CODE	PRICE RANK Ex.	PRICE RANK Ja.	NEW MARK	PART RANK	DESCRIPTION	
1	PGｉDM2128FCZZ	AW	FG	N	C	Right lower door PG	右下ﾄﾞｱ PG
2	XEBS740P12000	AA	DD		C	Screw(4×12)	ﾋﾞｽ
3	LSTPP0275FCZZ	AE	DS		C	Stopper	ｽﾄｯﾊﾟｰ
4	MLEVP0950FCZZ	AE	DS	N	C	Right door lock release lever	右ﾄﾞｱﾛｯｸ解除ﾚﾊﾞｰ
5	XBPS730P06000	AA	DD		C	Screw(3×6)	ﾋﾞｽ
6	PTME-0284FCZZ	AE	DS		C	Lock pawl	ﾛｯｸ爪
7	NSFTZ2930FCZZ	BQ	LP	N	C	Right lower door lock shaft	右下ﾄﾞｱﾛｯｸ軸
8	LHLDZ1639FCZZ	AC	DJ	N	C	Right door fulcrum holder R	右ﾄﾞｱ支点ﾎﾙﾀﾞｰR
9	MSPRC3402FCZZ	AC	DJ	N	C	Lock lever pressure spring	ﾛｯｸﾚﾊﾞｰ加圧ｽﾌﾟﾘﾝｸﾞ
10	GCAB-1089FCZZ	AV	FG	N	D	Right lower door cabinet	右下ﾄﾞｱｷｬﾋﾞ
11	GDOR-0042FCZZ	AE	DJ	N	D	Cover right lower door	ﾌﾀ右下ﾄﾞｱ
12	NROLP1516FCZZ	AA	DJ	N	C	Transport follower roller	搬送従動ﾛｰﾗｰ
13	MSPRC3401FCZZ	AB	DJ	N	C	Right lower door pressure spring	右下ﾄﾞｱ加圧ｽﾌﾟﾘﾝｸﾞ
14	NSFTZ2949FCZZ	AG	DX	N	C	Right door follower shaft	右ﾄﾞｱ従動軸
15	LX-BZ3008SCPM	AA	DD		C	Screw(3×8)	ｶｯﾌﾟｽｸﾘｭｰ
16	PRNGP0077FCZZ	AA	DD		C	Resin ring(E7)	樹脂ﾘﾝｸﾞ
17	XHBS740P08000	AA	DD		C	Screw(4×8)	ﾋﾞｽ
19	LHLDZ1638FCZZ	AC	DJ	N	C	Right door fulcrum holder F	右ﾄﾞｱ支点ﾎﾙﾀﾞｰF
	(Unit)						
901	CCAB-1089DS51	BD	GN	N	E	Right lower door unit	右下ﾄﾞｱﾕﾆｯﾄ

13 右下ﾄﾞｱﾕﾆｯﾄ (Right lower door unit)

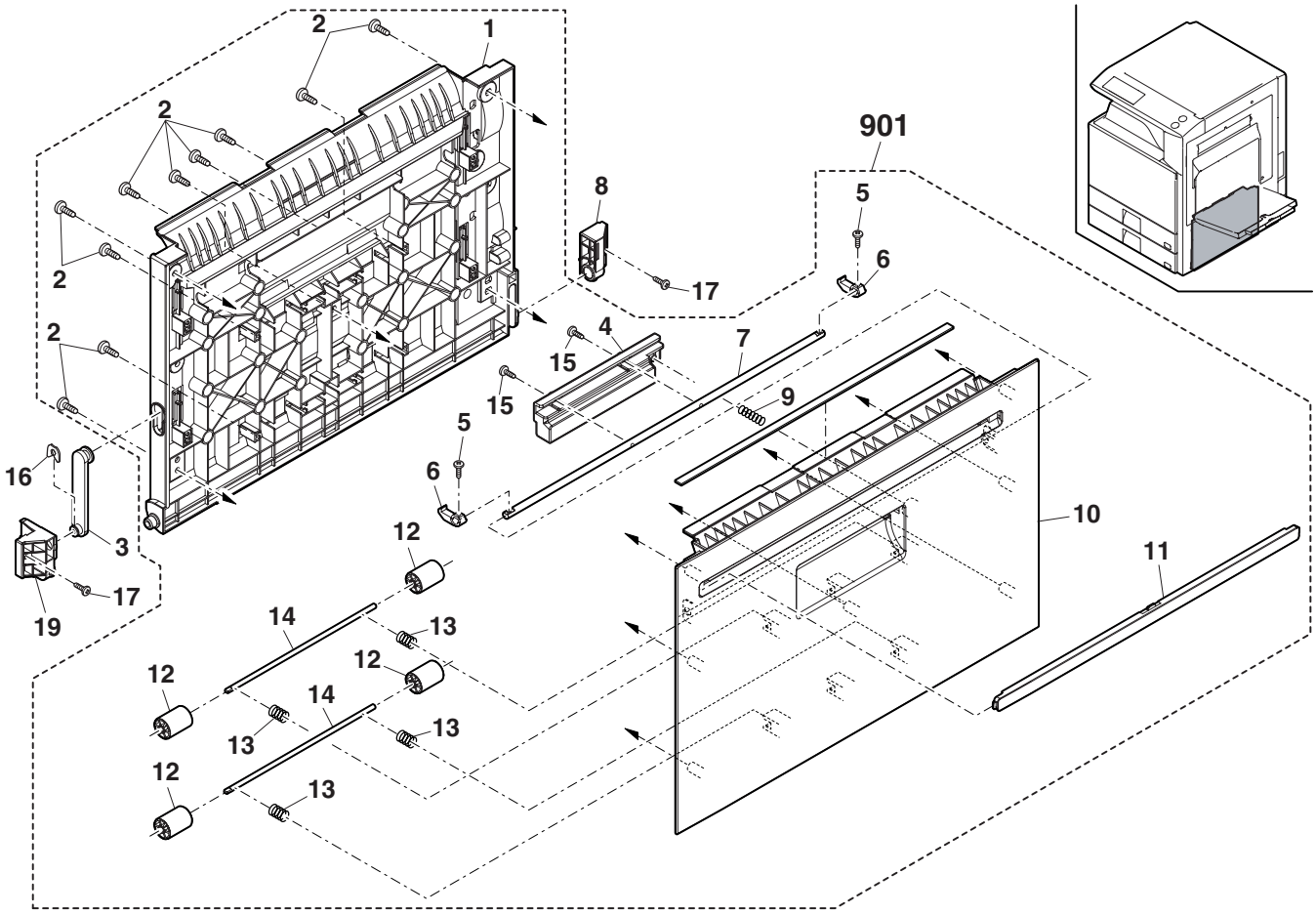

14 ﾏﾙﾁﾄﾚｲﾕﾆｯﾄ (Multi tray unit)

NO.	PARTS CODE	PRICE RANK Ex.	PRICE RANK Ja.	NEW MARK	PART RANK	DESCRIPTION	
1	CPLTM6610FC01	AE	DJ	N	C	MF tray arm plate	MF ﾄﾚｲｱｰﾑﾌﾟﾚｰﾄ
2	XHBS740P08000	AA	DD		C	Screw(4×8)	ﾋﾞｽ
3	MARMP0322FCZZ	AC	DJ	N	C	MF tray arm	MF ﾄﾚｲｱｰﾑ
4	PGiDM2119FCZZ	AE	DJ	N	C	MF width guide R	MF 幅ｶﾞｲﾄﾞ R
5	TLABH5022FCZZ	AF	DS	N	D	MF size label (Japan only)	MF ｻｲｽﾞﾗﾍﾞﾙ
	TLABH5110FCZZ	AD	DJ	N	D	MF size label (Except Japan)	MF ｻｲｽﾞﾗﾍﾞﾙ
6	PGiDM2118FCZZ	AD	DJ	N	C	MF width guide F	MF 幅ｶﾞｲﾄﾞ F
7	LSŌU-0199FCZZ	AR	EQ	N	D	MF tray upper	MF ﾄﾚｲ上
8	NGERR1675FCZZ	AE	DJ	N	C	MF width detect rack	MF 幅検知ﾗｯｸ
9	NGERP1635FCZZ	AD	DJ	N	C	MF width detect pinion gear	MF 幅検知ﾋﾟﾆｵﾝｷﾞｬ
10	XEPS730P06X00	AA	DD		C	Screw(3×6X)	ﾋﾞｽ
11	TLABH5109FCZZ	AD	DJ	N	D	MF paper direction label	MF 用紙方向ﾗﾍﾞﾙ
13	PCŌVP1835FCZZ	AC	DJ	N	C	MF harness cover	MF ﾊｰﾈｽｶﾊﾞｰ
14	PCŌVP1821FCZZ	AL	EB	N	D	MF tray upper inner cover	MF ﾄﾚｲ上内ｶﾊﾞｰ
15	XEBS730P08000	AC	DD		C	Screw(3×8)	ﾋﾞｽ
16	DHAi-3730FCZ1	AQ	EZ	N	C	MF tray harness	手差しﾄﾚｲﾊｰﾈｽ
17	LPLTP6483FCZZ	AF	DS	N	C	MF width detect fixing plate	MF 幅検知取付板
18	MSPRP3331FCZZ	AB	DJ	N	C	MF width detect plate spring	MF 幅検知板ｽﾌﾟﾘﾝｸﾞ
19	LX-BZ0884FCPZ	AB	DD	N	C	Pinion gear screw CGR	ﾋﾟﾆｵﾝｷﾞｬ用ﾋﾞｽ CGR
21	RDTCH0161FCZZ	AX	FG		B	Temperature and humidity sensor	温湿度ｾﾝｻｰ
22	VHPGP1S73P+-1	AF	DS		B	Photo sensor(GP1S73P)	ﾌｫﾄｾﾝｻｰ
23	MLŌKZ0012FCZZ	AC	DJ	N	C	ADU open/close door lock	ADU 開閉ﾄﾞｱﾛｯｸ
24	MSPRC3413FCZZ	AB	DJ	N	C	Open/close lock spring	開閉ﾛｯｸｽﾌﾟﾘﾝｸﾞ
25	LSŌU-0200FCZZ	AX	FG	N	D	MF tray lower	MF ﾄﾚｲ下
26	LSŌU-0201FCZZ	AN	EQ	N	D	MF tray 2 upper	MF ﾄﾚｲ２上
27	LHLDZ1631FCZZ	AD	DJ	N	C	MF harness holder	MF ﾊｰﾈｽﾎﾙﾀﾞｰ
28	PGiDW2158FCZZ	AF	DS	N	C	MF support guide	MF 補助ｶﾞｲﾄﾞ
29	MLEVP0929FCZZ	AC	DJ	N	C	MF paper detect actuator	MF 用紙検知ｱｸﾁｪｰﾀｰ
30	DHAi-3735FCZ3	AG	DX	N	C	MF tray harness 2	手差しﾄﾚｲﾊｰﾈｽ２
31	LSŌU-0202FCZZ	AL	EB	N	D	MF tray 2 lower	MF ﾄﾚｲ２下
	(Unit)						
901	CSŌU-0200DS52	BK	HG	N	D	Multi tray unit	ﾏﾙﾁﾄﾚｲﾕﾆｯﾄ

14 マルチトレイユニット (Multi tray unit)

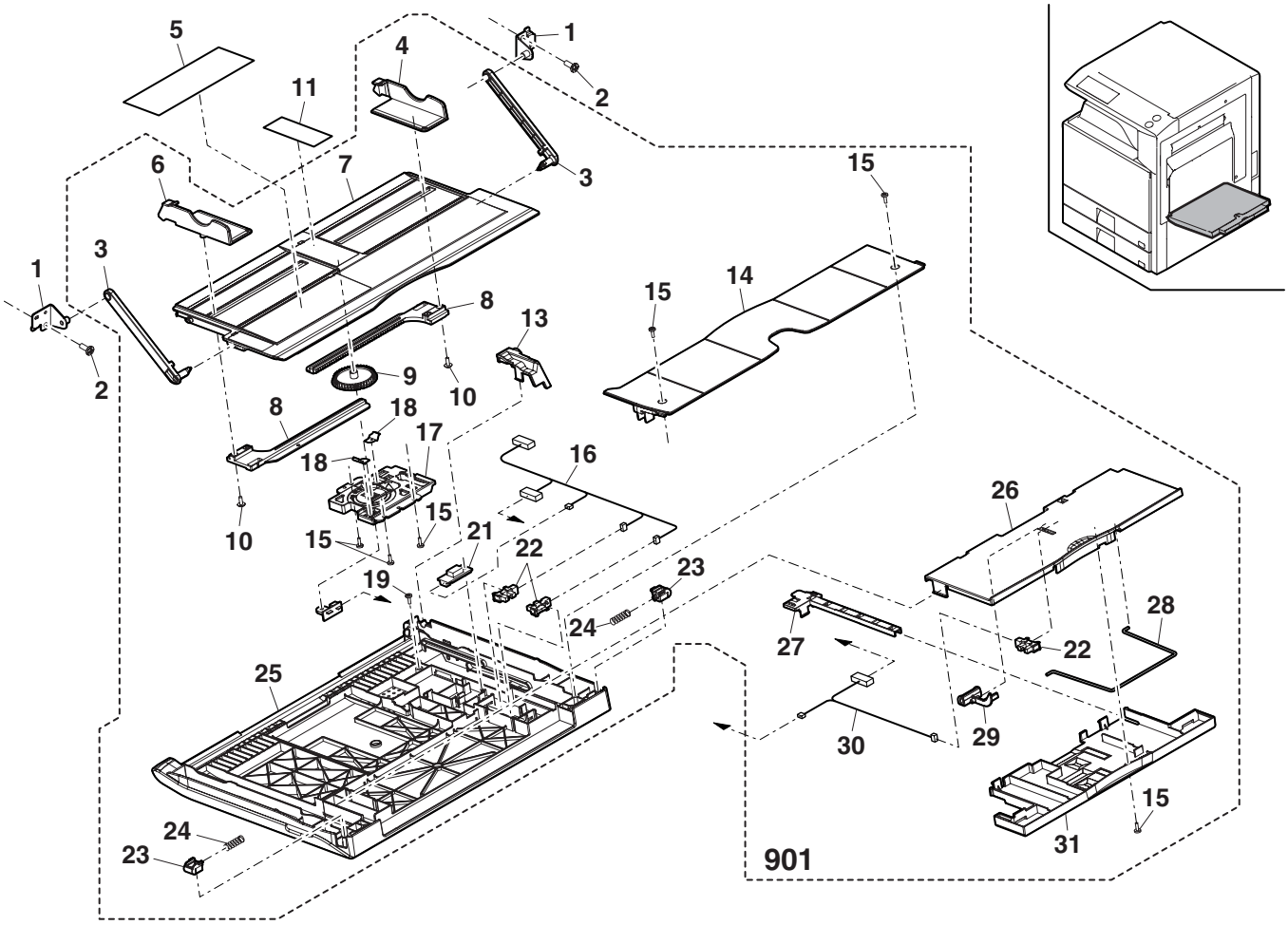

15 ﾏﾙﾁ給紙ﾕﾆｯﾄ 1(Multi paper feed unit 1)

NO.	PARTS CODE	PRICE RANK Ex.	PRICE RANK Ja.	NEW MARK	PART RANK	DESCRIPTION	
1	NGERH1640FCZZ	AC	DJ	N	C	Gear(20T)	ｷﾞﾔ
2	LPiNS0155FCZZ	AA	DD		C	Pin(3-10)	平行ﾋﾟﾝ
3	XRESP70-08000	AA	DD		C	E ring(E7)	E ﾘﾝｸﾞ
4	NBRGC0504FCZZ	AC	DJ		C	Bearing(F8X12X5 16X)	軸受
5	XHBS730P08000	AB	DD		C	Screw(3×8)	ﾋﾞｽ
6	XEBS740P10000	AA	DD		C	Screw(4×10)	ﾋﾞｽ
7	XRESP50-06000	AA	DD		C	E ring(E5)	E ﾘﾝｸﾞ
8	NGERH1634FCZZ	AR	EQ	N	C	Separate gear(18T)	分離ｷﾞﾔ
9	NGERH1510FCZZ	AD	DJ		C	PS front drive gear(20T)	PS 前駆動ｷﾞﾔ
10	NBRGM0096FCZ1	AC	DJ		C	Bearing	軸受
11	CPLTM6501FC01	AL	EB	N	C	MF drive plate	MF 駆動ﾌﾟﾚｰﾄ
12	LPiNS0133FCZZ	AA	DD		C	Pin(2-10)	平行ﾋﾟﾝ
13	XEPS730P08X00	AA	DD		C	Screw(3×8X)	ﾋﾞｽ
14	MSLiP0148FCZZ	AC	DJ	N	C	MF slider R	MF ｽﾗｲﾀﾞｰ R
15	MSPRC3407FCZZ	AC	DJ	N	C	MF slider spring	MF ｽﾗｲﾀﾞｰｽﾌﾟﾘﾝｸﾞ
16	PSHEZ4960FCZZ	AQ	EQ		C	Pick up pad	呼込みﾊﾟｯﾄ
17	PCOVP1833FCZZ	AD	DJ	N	D	MF lower maintenance cover	MF 下ﾒﾝﾃﾅﾝｽｶﾊﾞｰ
18	VHPGP1S73P+-1	AF	DS		B	Photo sensor(GP1S73P)	ﾌｫﾄｾﾝｻｰ
19	LPLTP5827FCZZ	AF	DS		C	Multi sensor fixing plate	ﾏﾙﾁｾﾝｻｰ取付板
20	XEBS730P08000	AC	DD		C	Screw(3×8)	ﾋﾞｽ
21	PGiDM2114FCZZ	AQ	EQ	N	C	MF lower base PG	MF 下ﾍﾞｰｽﾍﾟｰﾊﾟｰｶﾞｲﾄﾞ
22	MSLiP0147FCZZ	AC	DJ	N	C	MF slider F	MF ｽﾗｲﾀﾞｰ F
23	NROLR1519FCZZ	AU	FG	N	A	MF transport roller	MF 搬送ﾛｰﾗｰ
24	CPLTM6502FC01	AK	DX	N	C	MF front plate	MF 前ﾌﾟﾚｰﾄ
25	XHBS740P08000	AA	DD		C	Screw(4×8)	ﾋﾞｽ
26	NROLP0896FCZZ	AC	DD		C	Transport follower roller	搬送従動ﾛｰﾗｰ
27	MSPRC3410FCZZ	AC	DJ	N	C	ADU follower roller spring upper	ADU 従動ﾛｰﾗｰｽﾌﾟﾘﾝｸﾞ上
28	NSFTZ2933FCZZ	BQ	LP	N	C	MF LCC pass roller shaft	MF LCC ﾊﾟｽﾛｰﾗｰ軸
29	NCPL-0081FCZZ	AH	DX	N	A	One way coupling	ﾜﾝｳｪｲｶｯﾌﾟﾘﾝｸﾞ
30	NSFTZ2935FCZ1	AP	EQ	N	C	Separate roller coupling shaft	分離ﾛｰﾗｰｶｯﾌﾟﾘﾝｸﾞ軸
31	PCLC-0316FCP1	AP	EQ	N	B	Separate torque limiter	分離ﾄﾙｸﾘﾐｯﾀｰ
32	LPiNS0333FCZZ	AB	DJ	N	C	Spring pin(2-12)	ｽﾌﾟﾘﾝｸﾞﾋﾟﾝ
33	NCPL-0067FCZZ	AD	DJ		C	Separate coupling	分離ｶｯﾌﾟﾘﾝｸﾞ
34	LPiNS0334FCZZ	AB	DJ		C	Spring pin(3-14)	ｽﾌﾟﾘﾝｸﾞﾋﾟﾝ
35	NSFTZ2934FCZZ	AR	EQ	N	C	MF separate rolelr shaft	MF 分離ﾛｰﾗｰ軸
36	LHLDZ1630FCZZ	AC	DJ	N	C	MF separate roller rotation fulcrum holder	MF 分離ﾛｰﾗｰ回転支点ﾎﾙﾀﾞｰ
37	NROLR1466FCZ1	AN	DX		A	PF separate roller	給紙分離ﾛｰﾗｰ
38	RPLU-0353FCPZ	AQ	EQ	N	B	Gate solenoid	ｹﾞｰﾄｿﾚﾉｲﾄﾞ
39	MARMP0327FCZZ	AC	DJ	N	C	MF stop arm	MF ｽﾄｯﾌﾟｱｰﾑ
40	DHAi-3733FCZZ	AG	DX	N	C	Multi lower unit harness	ﾏﾙﾁ下ﾕﾆｯﾄﾊｰﾈｽ
41	MSPRD3422FCZZ	AC	DJ	N	C	MF stopper spring	MF ｽﾄｯﾊﾟｰｽﾌﾟﾘﾝｸﾞ
42	PRNGP0115FCZZ	AB	DJ		C	Resin E ring(E3)	樹脂 E ﾘﾝｸﾞ
43	LSTPP0375FCZZ	AM	EG		C	Stopper	ｽﾄｯﾊﾟｰ
44	LPLTM6499FCZZ	AM	EG	N	C	MF lower base guide reinforce plate	MF 下ﾍﾞｰｽｶﾞｲﾄﾞ補強ﾌﾟﾚｰﾄ
45	LPiNS0089FCZZ	AA	DD		C	Spring pin	ｽﾌﾟﾘﾝｸﾞﾋﾟﾝ
46	MSPRC3408FCZZ	AC	DJ	N	C	MF separate roller spring	MF 分離ﾛｰﾗｰｽﾌﾟﾘﾝｸﾞ
47	PMLT-1447FCZZ	AA	DJ	N	C	MF gate silence sushion	MF ｹﾞｰﾄ消音ﾓﾙﾄ
48	LX-BZ0736FCPZ	AC	DD	N	C	DV drive step screw	DV 駆動段ﾋﾞｽ
501	CSFTZ2935DS51	AM	EG	N	E	Separate roller coupling shaft	分離ﾛｰﾗｰｶｯﾌﾟﾘﾝｸﾞ軸
	(Unit)						
901	DUNT-7466DS11	BP	LP	N	E	Multi paper feed unit (Include Block [16])	ﾏﾙﾁ給紙ﾕﾆｯﾄ

15 マルチ給紙ユニット 1(Multi paper feed unit 1)

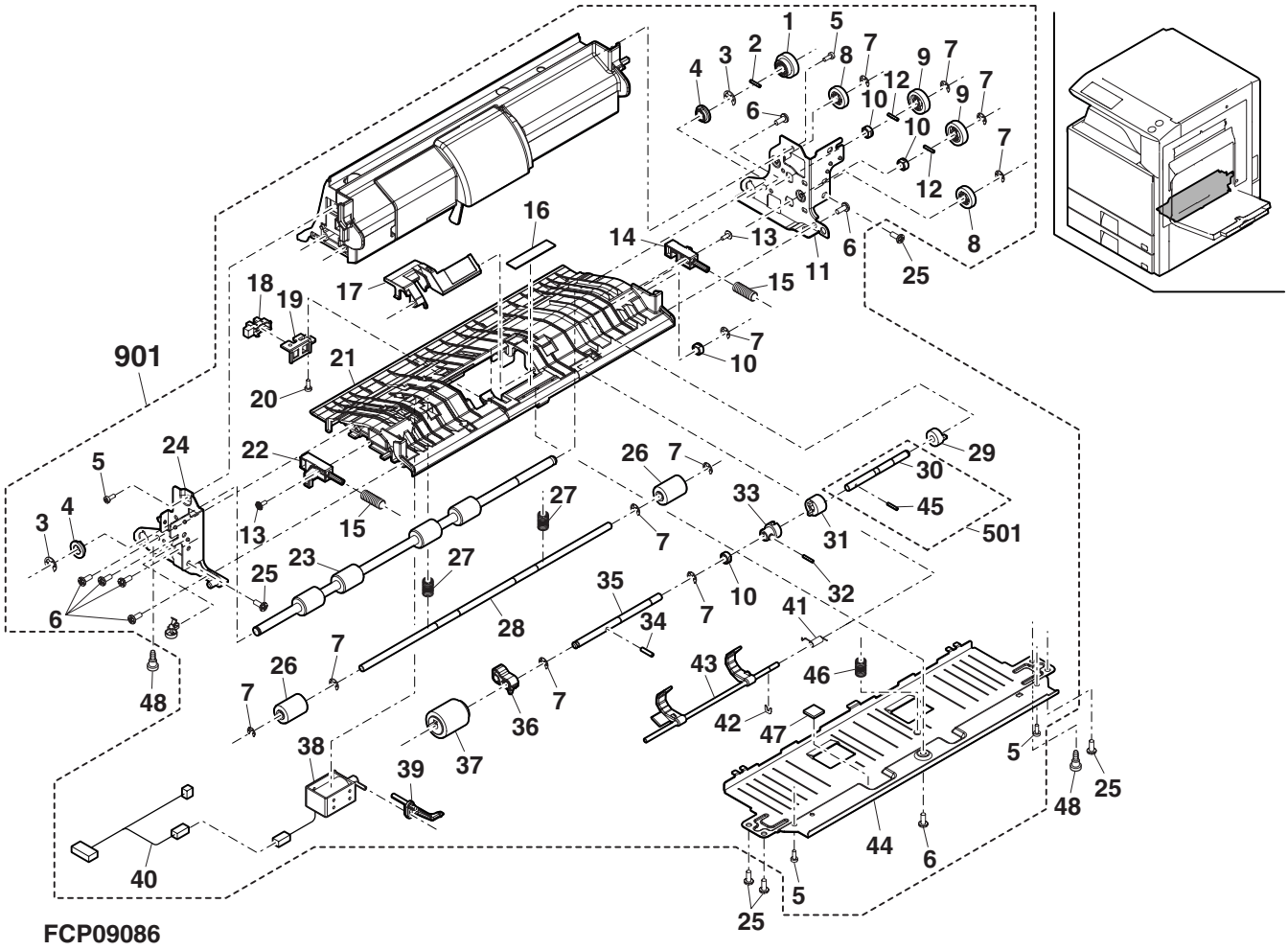

16 ﾏﾙﾁ給紙ﾕﾆｯﾄ 2(Multi paper feed unit 2)

NO.	PARTS CODE	PRICE RANK Ex.	PRICE RANK Ja.	NEW MARK	PART RANK	DESCRIPTION	
1	MLEVP0938FCZZ	AC	DJ	N	C	MF PF sensor actuator	MF 入紙ｾﾝｻｰｱｸﾁｪｰﾀｰ
2	MSPRD3421FCZZ	AB	DJ	N	C	MF PF sensor actuator spring	MF 入紙ｾﾝｻｰｱｸﾁｪｰﾀｰ ｽﾌﾟﾘﾝｸﾞ
3	PGiDM2117FCZZ	AQ	EQ	N	C	MF ADU paper guide	MF ADU ﾍﾟｰﾊﾟｰｶﾞｲﾄﾞ
4	XHBS730P08000	AB	DD		C	Screw(3×8)	ﾋﾞｽ
5	CPLTM6503FC01	AL	EB	N	C	MF upper guide reinforce plate	MF 上ｶﾞｲﾄﾞ補強ﾌﾟﾚｰﾄ
6	XBBS730P06000	AC	DD		C	Screw(3×6)	ﾋﾞｽ
7	XEBS740P10000	AA	DD		C	Screw(4×10)	ﾋﾞｽ
8	MLEVP0939FCZZ	AD	DJ	N	C	MF paper existence sensor actuator	MF 用紙有無ｾﾝｻｰｱｸﾁｪｰﾀｰ
9	MSPRD3423FCZZ	AB	DJ	N	C	MF paper existence sensor actuator spring	MF 用紙有無ｾﾝｻｰｱｸﾁｪｰﾀｰ ｽﾌﾟﾘﾝｸﾞ
10	PCOVP1834FCZZ	AH	DX	N	D	MF pick up cover	MF ﾋﾟｯｸｱｯﾌﾟｶﾊﾞｰ
11	RPLU-0365FCZZ	AT	EZ	N	B	MF pick up solenoid	MF ﾋﾟｯｸｱｯﾌﾟｿﾚﾉｲﾄﾞ
12	MARMP0328FCZZ	AD	DJ	N	C	MF pick up solenoid arm	MF ﾋﾟｯｸｱｯﾌﾟｿﾚﾉｲﾄﾞｱｰﾑ
13	MSPRT3435FCZZ	AC	DJ	N	C	MF pick up solenoid spring	MF ﾋﾟｯｸｱｯﾌﾟｿﾚﾉｲﾄﾞ ｽﾌﾟﾘﾝｸﾞ
14	LPiNS0330FCZZ	AB	DJ		C	Spring pin(3-16)	ｽﾌﾟﾘﾝｸﾞﾋﾟﾝ
15	DHAi-3732FCZ1	AN	EB	N	C	Multi upper UN harness	ﾏﾙﾁ上 UN ﾊｰﾈｽ
16	VHPGP1S73P+-1	AF	DS		B	Photo sensor(GP1S73P)	ﾌｫﾄｾﾝｻｰ
17	XEBS730P08000	AC	DD		C	Screw(3×8)	ﾋﾞｽ
18	LPLTP5827FCZZ	AF	DS		C	Multi sensor fixing plate	ﾏﾙﾁｾﾝｻｰ取付板
20	NSFTZ2937FCZZ	AP	EQ	N	C	MF PF roller shaft	MF 給紙ﾛｰﾗｰ軸
21	PGiDM2115FCZZ	AP	EQ	N	C	MF upper base guide	MF 上ﾍﾞｰｽｶﾞｲﾄﾞ
22	MSPRT3436FCZZ	AC	DJ	N	C	MF pick up arm spring	MF ﾋﾟｯｸｱｯﾌﾟｱｰﾑｽﾌﾟﾘﾝｸﾞ
23	XRESP40-06000	AA	DD		C	E ring(E4)	E ﾘﾝｸﾞ
24	MARMP0329FCZZ	AD	DJ	N	C	MF pick up arm	MF ﾋﾟｯｸｱｯﾌﾟｱｰﾑ
25	NBRGM0096FCZ1	AC	DJ		C	Bearing	軸受
26	XRESP50-06000	AA	DD		C	E ring(E5)	E ﾘﾝｸﾞ
27	NCPL-0081FCZZ	AH	DX	N	A	One way coupling	ﾜﾝｳｪｲｶｯﾌﾟﾘﾝｸﾞ
28	NPLYZ0439FCZZ	AC	DJ	N	C	MF drive pulley	手差し駆動ﾌﾟｰﾘｰ
29	NROLR1466FCZ1	AN	DX		A	PF separate roller	給紙分離ﾛｰﾗｰ
30	NSFTZ2936FCZZ	AN	EG	N	C	MF pick up roller shaft	MF ﾋﾟｯｸｱｯﾌﾟﾛｰﾗｰ軸
31	NPLYZ0438FCZZ	AC	DJ	N	C	Pick up roller pulley(22P)	呼込みﾛｰﾗｰﾌﾟｰﾘｰ
32	NBLTH0453FCZZ	AQ	EQ	N	B	MF pick up belt	MF ﾋﾟｯｸｱｯﾌﾟﾍﾞﾙﾄ
33	NROLR1467FCZ1	AN	DX		A	Pick up roller	呼込ﾛｰﾗｰ
	(Unit)						
901	DUNT-7466DS11	BP	LP	N	E	Multi paper feed unit (Include Block [15])	ﾏﾙﾁ給紙ﾕﾆｯﾄ

16 ﾏﾙﾁ給紙ﾕﾆｯﾄ 2(Multi paper feed unit 2)

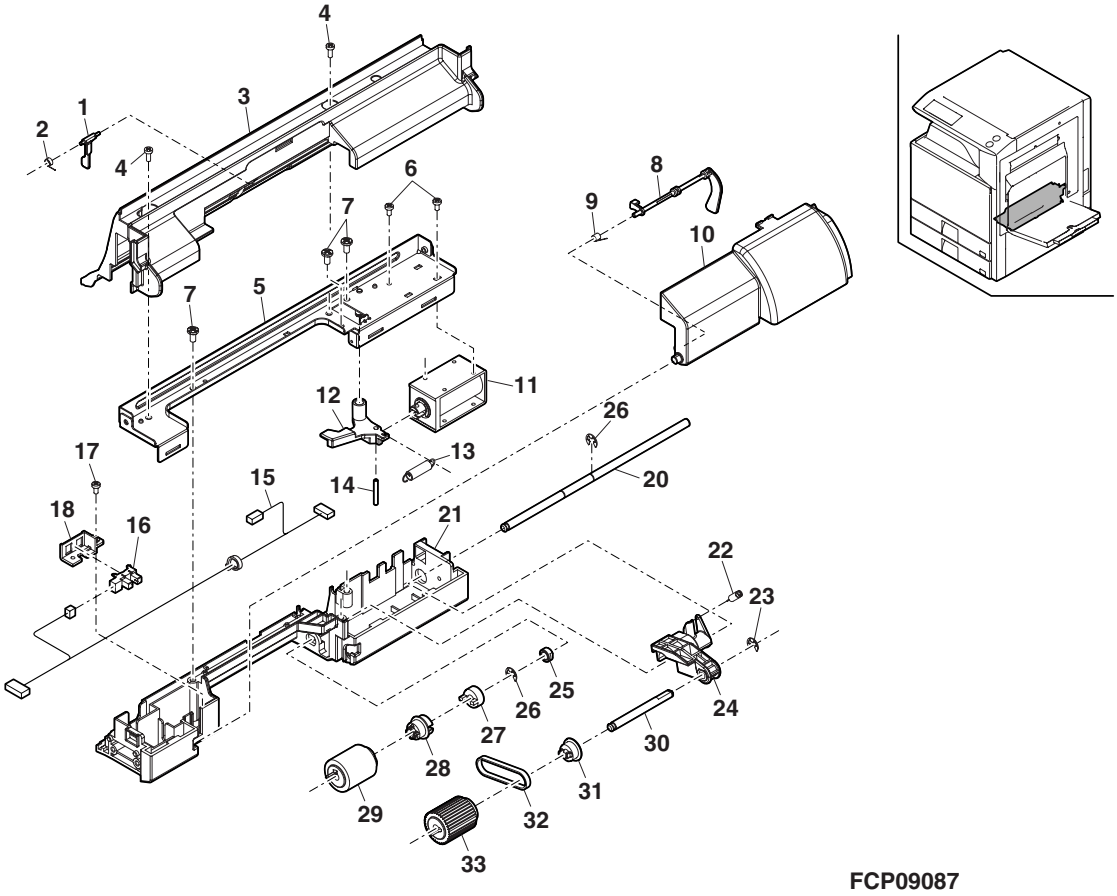

17 PS ﾕﾆｯﾄ 1(PS unit 1)

NO.	PARTS CODE	PRICE RANK Ex.	PRICE RANK Ja.	NEW MARK	PART RANK	DESCRIPTION	
1	LSTYM0349FCZZ	AH	DX	N	C	PS stay	PS ｽﾃｲ
2	XEBS730P08000	AC	DD		C	Screw(3×8)	ﾋﾞｽ
3	XEBS740P10000	AA	DD		C	Screw(4×10)	ﾋﾞｽ
4	XRESP50−06000	AA	DD		C	E ring(E5)	E ﾘﾝｸﾞ
5	MSPRC3403FCZZ	AB	DJ	N	C	PS pressure spring	PS 加圧ｽﾌﾟﾘﾝｸﾞ
6	NBRGP0741FCZZ	AC	DJ	N	C	PS pressure bearing	PS 加圧軸受
7	NGERH1609FCZZ	AC	DJ	N	C	Gear(18T)	ｷﾞｬ
8	NRŌLP1527FCZZ	AY	FQ	N	A	PS follower roller	PS 従動ﾛｰﾗｰ
9	NRŌLP0896FCZZ	AC	DD		C	Transport follower roller	搬送従動ﾛｰﾗｰ
10	MSPRC3404FCZZ	AC	DJ	N	C	PS front follower roller spring	PS 前従動ﾛｰﾗｰｽﾌﾟﾘﾝｸﾞ
11	NSFTZ2932FCZZ	BQ	LP	N	C	PS front roller follower shaft	PS 前ﾛｰﾗｰ従動軸
12	VHPGP2A200L−1	AR	EQ		B	PS sensor	PS ｾﾝｻｰ
13	QEARP0201FCZZ	AC	DJ	N	C	Roller earth plate	ﾛｰﾗｰｱｰｽ板
14	MSPRT3432FCZZ	AC	DJ	N	C	JAM release spring	JAM 解除ｽﾌﾟﾘﾝｸﾞ
15	JHNDP0184FCZZ	AU	EZ	N	C	JAM release handle	JAM 解除ﾊﾝﾄﾞﾙ
16	LHLDZ1679FCZZ	AC	DJ	N	C	Sensor holder	ｾﾝｻｰﾎﾙﾀﾞｰ
17	VHPGP1A71L3−1	AG	DS		B	PS front 2 sensor	PS 前 2 ｾﾝｻｰ
18	MLEVP0951FCZZ	AC	DJ	N	C	PS front 2 sensor actuator	PS 前 2 ｾﾝｻｰｱｸﾁｪｰﾀｰ
19	MSPRD3420FCZZ	AB	DJ	N	C	PS front 2 actuator spring	PS 前 2 ｱｸﾁｪｰﾀｰｽﾌﾟﾘﾝｸﾞ
20	XHBS730P08000	AB	DD		C	Screw(3×8)	ﾋﾞｽ
21	LPiNS0337FCZZ	AB	DJ		C	Pin(3-12)	平行ﾋﾟﾝ
22	XRESP70−08000	AA	DD		C	E ring(E7)	E ﾘﾝｸﾞ
23	XHBS740P08000	AA	DD		C	Screw(4×8)	ﾋﾞｽ
24	DHAi−3716FCZ1	AF	DS	N	C	PS UN harness	PS UN ﾊｰﾈｽ
	(Unit)						
901	CDAiU0694DS51	BL	HG	N	E	PS unit (Include Block [18])	PS ﾕﾆｯﾄ

17 PS ﾕﾆｯﾄ 1(PS unit 1)

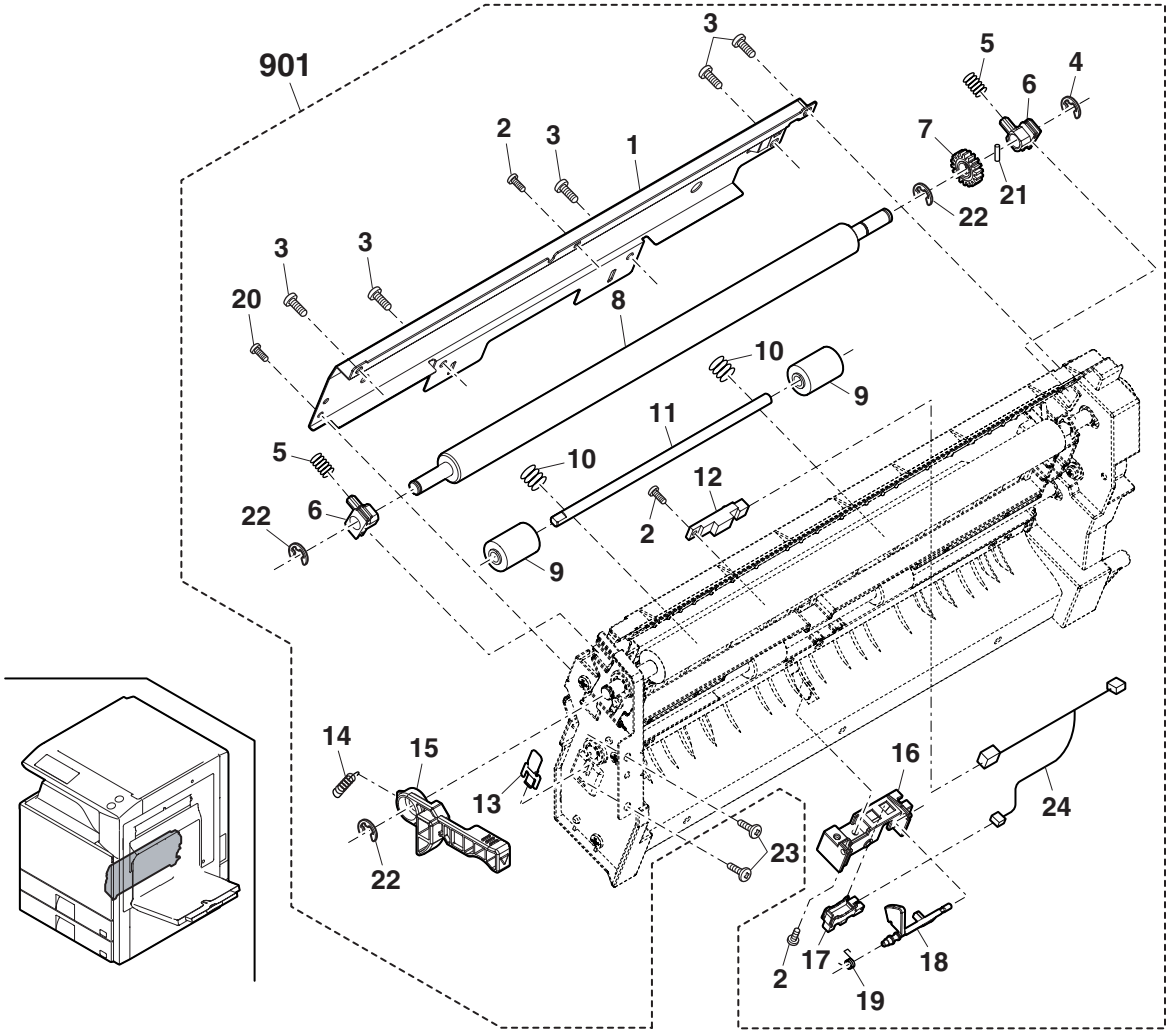

FCP09088

18 PS ﾕﾆｯﾄ 2(PS unit 2)

NO.	PARTS CODE	PRICE RANK Ex.	PRICE RANK Ja.	NEW MARK	PART RANK	DESCRIPTION	
1	LX-BZ0589FCP1	AA	DD	N	C	Coupling screw N	ｶｯﾌﾟﾘﾝｸﾞﾋﾞｽN
2	NCPL-0062FCZZ	AD	DJ		C	PF coupling	給紙ｶｯﾌﾟﾘﾝｸﾞ
3	MSPRC3405FCZZ	AB	DJ	N	C	Coupling spring	ｶｯﾌﾟﾘﾝｸﾞｽﾌﾟﾘﾝｸﾞ
4	NBRGC0504FCZZ	AC	DJ		C	Bearing(F8X12X5 16X)	軸受
5	NGERH1622FCZZ	AE	DJ	N	C	Joint gear	連結ｷﾞｬ
6	NSFTZ2931FCZZ	BQ	LP	N	C	PS joint idle shaft	PS 連結ｱｲﾄﾞﾙ軸
7	NGERH1640FCZZ	AC	DJ	N	C	Gear(20T)	ｷﾞｬ
8	LPiNS0337FCZZ	AB	DJ		C	Pin(3-12)	平行ﾋﾟﾝ
9	XRESP70-08000	AA	DD		C	E ring(E7)	E ﾘﾝｸﾞ
10	NGERH1474FCZZ	AC	DD		C	PS gear	PS ｷﾞｬ
11	XBPS740P12KS0	AC	DD		C	Screw(4×12KS)	ﾋﾞｽ
12	NROLR1526FCZZ	AZ	FQ	N	A	PS roller	PS ﾛｰﾗｰ
13	QEARP0196FCZZ	AD	DJ	N	C	Earth plate A	ｱｰｽ板 A
14	NROLR1529FCZZ	AU	FG	N	A	PS front roller 2	PS 前ﾛｰﾗｰ 2
15	PSHEZ5386FCZZ	AD	DJ	N	C	PS guide sheet	PS ｶﾞｲﾄﾞｼｰﾄ
16	LX-WZ0017FCPZ	AA	DD	N	C	Adjust washer	調整ﾜｯｼｬｰ 725
17	LPLTM6517FCZZ	AF	DS	N	C	PS side plate F	PS 側板 F
18	LPLTM6518FCZZ	AC	DJ	N	C	PS slanting reinforce plate	PS 斜め補強板
19	PCLR-0501FCZZ	AB	DJ	N	C	Delivery guide collar	排紙ｶﾞｲﾄﾞｺﾛ
20	PGiDM2129FCZZ	AM	EG	N	C	PS upper PG	PS 上 PG
21	LSTYM0260FCZZ	AK	EB		C	Reinforse stay	補強ｽﾃｲ
22	QEARP0190FCZZ	AC	DJ	N	C	Earth spring	ｱｰｽｽﾌﾟﾘﾝｸﾞ
23	XEBS730P08000	AC	DD		C	Screw(3×8)	ﾋﾞｽ
24	LDAiU0694FCZZ	AV	FG	N	D	PS base plate	PS 台板
25	XEBS740P10000	AA	DD		C	Screw(4×10)	ﾋﾞｽ
26	XHBS730P08000	AB	DD		C	Screw(3×8)	ﾋﾞｽ
27	LX-BZ0342FCPZ	AB	DD	N	C	PS switch screw	電源ｽｲｯﾁﾋﾞｽ
28	LPiNS0155FCZZ	AA	DD		C	Pin(3-10)	平行ﾋﾟﾝ
	(Unit)						
901	CDAiU0694DS51	BL	HG	N	E	PS unit (Include Block [17])	PS ﾕﾆｯﾄ

18 PS ﾕﾆｯﾄ 2(PS unit 2)

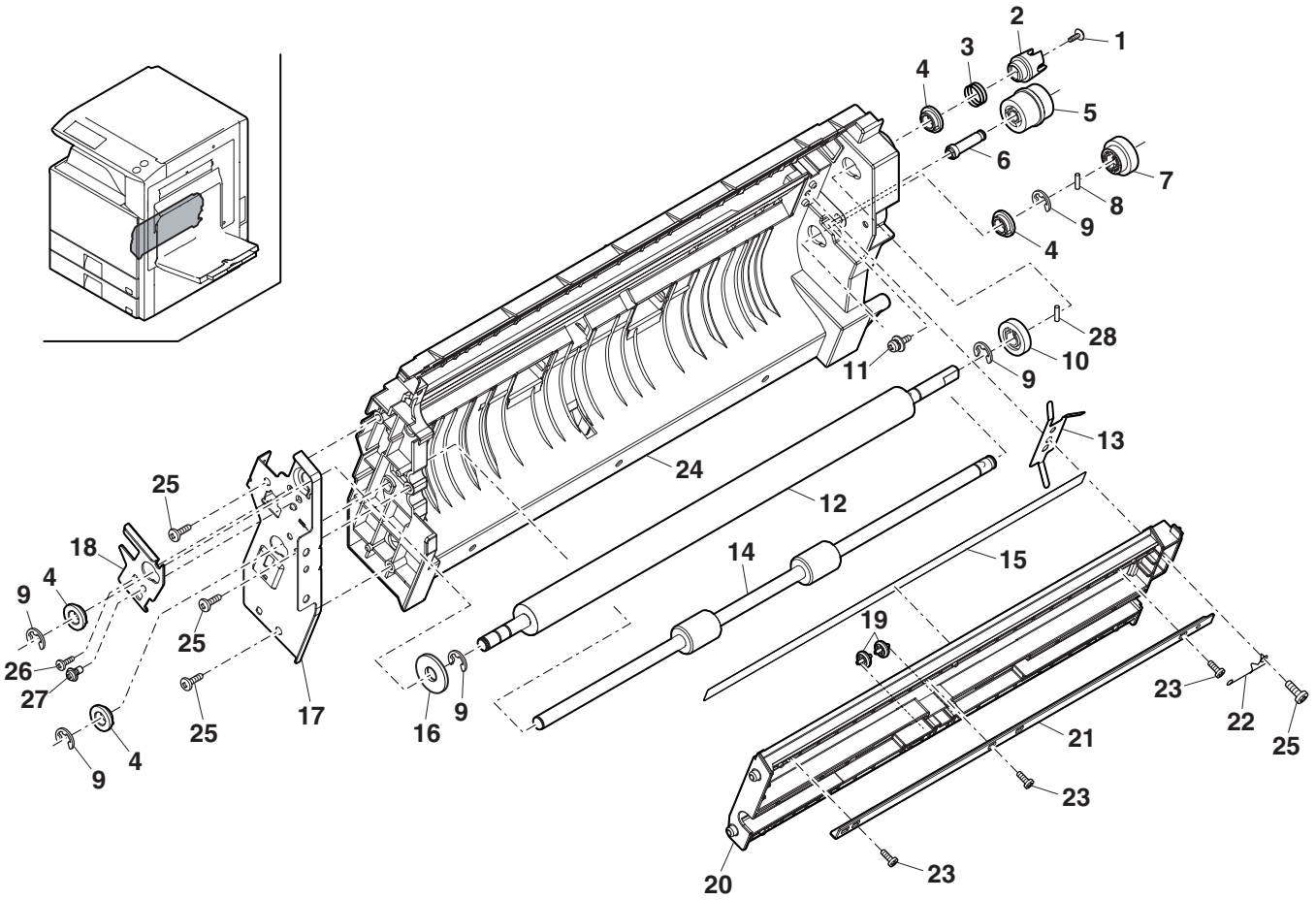

FCP09089

19 ﾄﾅｰ搬送ﾊﾟｲﾌﾟﾕﾆｯﾄ (Toner transport pipe unit)

NO.	PARTS CODE	PRICE RANK Ex.	PRICE RANK Ja.	NEW MARK	PART RANK	DESCRIPTION	
1	PMLT-1437FCZZ	AB	DJ	N	C	Pipe cushion upper	ﾊﾟｲﾌﾟﾓﾙﾄ上
2	PPiPP0217FCZZ	AD	DJ	N	C	TN pipe	TNﾊﾟｲﾌﾟ
3	PMLT-1436FCZ1	AC	DJ	N	C	Pipe cushion lower	ﾊﾟｲﾌﾟﾓﾙﾄ下
4	LHLDZ1667FCZ1	AD	DJ	N	C	Pipe holder(Y)	ﾊﾟｲﾌﾟﾎﾙﾀﾞｰ
	LHLDZ1668FCZ1	AD	DJ	N	C	Pipe holder(MCK)	ﾊﾟｲﾌﾟﾎﾙﾀﾞｰ
5	XHBS740P08000	AA	DD		C	Screw(4×8)	ﾋﾞｽ
6	MSPRC3397FCZ1	AA	DJ	N	C	TN shutter spring	TNｼｬｯﾀｰｽﾌﾟﾘﾝｸﾞ
7	PSHEZ5383FCZ1	AC	DJ	N	C	Shutter suede	ｼｬｯﾀｰｽｴｰﾄﾞ
8	PSHT-0109FCZ2	AC	DJ	N	C	TN pipe shutter	TNﾊﾟｲﾌﾟｼｬｯﾀｰ
10	PMLT-1428FCZ1	AD	DJ	N	C	Pipe cushion	ﾊﾟｲﾌﾟﾓﾙﾄ
11	PCOVP1889FCZ1	AC	DJ	N	C	TN pipe cover	TNﾊﾟｲﾌﾟｶﾊﾞｰ
12	PSEL-0934FCZZ	AC	DJ	N	D	Pipe cover seal	ﾊﾟｲﾌﾟｶﾊﾞｰｼｰﾙ
13	MSPRC3493FCZZ	AA	DJ	N	C	TN pipe spring	TNﾊﾟｲﾌﾟｽﾌﾟﾘﾝｸﾞ
15	PSHEZ5468FCZZ	AC	DJ	N	C	Pipe suede	ﾊﾟｲﾌﾟｽｴｰﾄﾞ
16	PCOVP2005FCZZ	AC	DJ	N	C	Pipe shutter cover	ﾊﾟｲﾌﾟｼｬｯﾀｰｶﾊﾞｰ
17	PSEL-0950FCZZ	AA	DJ	N	C	Shutter cover seal A	ｼｬｯﾀｰｶﾊﾞｰｼｰﾙ A
501	CPiPP0217DS51	AP	EQ	N	E	TN pipe Y unit	TNﾊﾟｲﾌﾟ Yﾕﾆｯﾄ
502	CPiPP0217DS52	AP	EQ	N	E	TN pipe MCK unit	TNﾊﾟｲﾌﾟ MCKﾕﾆｯﾄ

19 ﾄﾅｰ搬送ﾊﾟｲﾌﾟﾕﾆｯﾄ (Toner transport pipe unit)

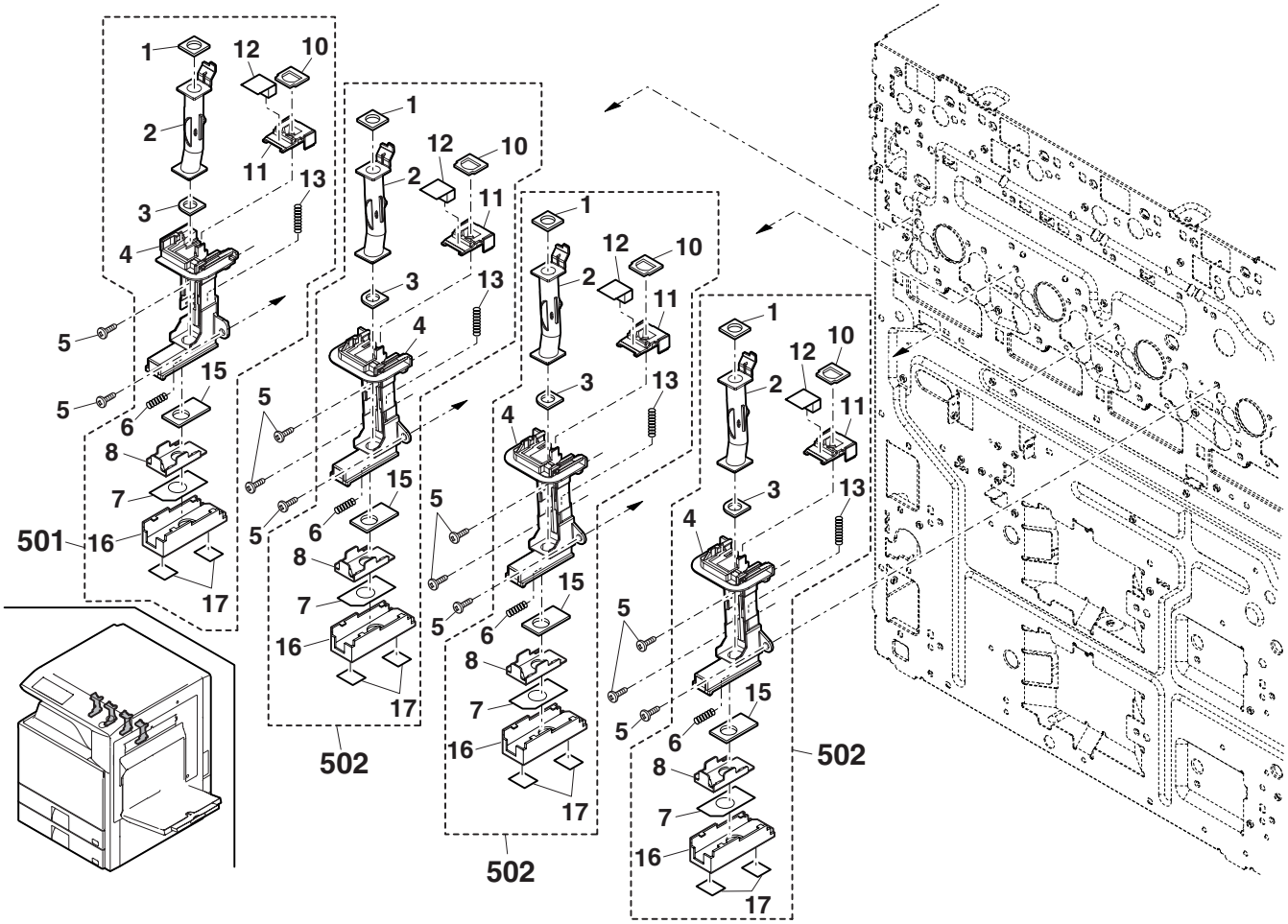

FCP09090

20 ﾚｼﾞｽﾄｾﾝｻｰﾕﾆｯﾄ (Resist sensor unit)

NO.	PARTS CODE	PRICE RANK Ex.	PRICE RANK Ja.	NEW MARK	PART RANK	DESCRIPTION	
1	LHLDZ1655FCZZ	AM	EG	N	C	Sensor holder	ｾﾝｻｰﾎﾙﾀﾞｰ
2	LPLTP6488FCZZ	AB	DJ	N	C	Shutter slide plate	ｼｬｯﾀｰｽﾗｲﾄﾞ板
3	XEBS730P08000	AC	DD		C	Screw(3×8)	ﾋﾞｽ
4	VHPKR2051SH−1	AW	FG	N	B	Resist sensor	ﾚｼﾞｽﾄｾﾝｻｰ
5	VHPGP2TC21／／1	BE	GN		B	Pro con sensor	ﾌﾟﾛｺﾝｾﾝｻｰ
6	RPLU−0367FCZZ	AN	EG	N	B	Shutter solenoid	ｼｬｯﾀｰｿﾚﾉｲﾄﾞ
7	DHAｉ−3717FCZ1	AN	EG	N	C	Pro con unit harness	ﾌﾟﾛｺﾝ UN ﾊｰﾈｽ
8	XHBS730P08000	AB	DD		C	Screw(3×8)	ﾋﾞｽ
9	MSPRD3383FCZZ	AB	DJ	N	C	Shutter spring	ｼｬｯﾀｰ用ｽﾌﾟﾘﾝｸﾞ
10	LPLTP6487FCZZ	AG	DS	N	C	Shutter movable plate	ｼｬｯﾀｰ可動板
11	LSTYM0360FCZZ	AK	DX	N	C	Sensor fixing stay	ｾﾝｻｰ取付ｽﾃｰ
12	XBBS730P05000	AA	DD		C	Screw(3×5)	ﾋﾞｽ
13	XHBS740P08000	AA	DD		C	Screw(4×8)	ﾋﾞｽ
	(Unit)						
901	CHLDZ1655DS51	BG	GX	N	E	Resist sensor unit(Without No.13)	ﾚｼﾞｽﾄｾﾝｻｰﾕﾆｯﾄ

20 ﾚｼﾞｽﾄｾﾝｻｰﾕﾆｯﾄ (Resist sensor unit)

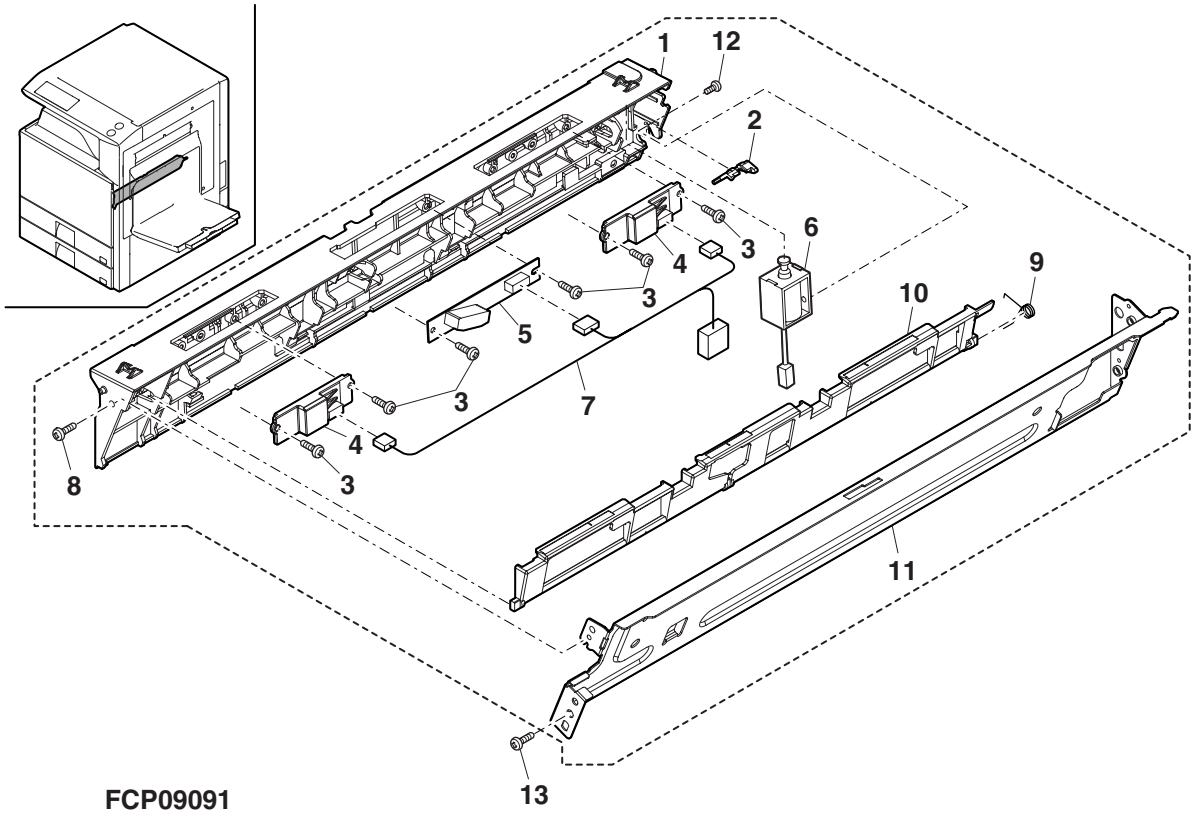

21 LSU 部 (LSU section)

NO.	PARTS CODE	PRICE RANK Ex.	PRICE RANK Ja.	NEW MARK	PART RANK	DESCRIPTION	
1	LPLTM6529FCZZ	AM	EG		C	LSU left plate	LSU 左ﾌﾟﾚｰﾄ
2	XHBS740P08000	AA	DD		C	Screw(4×8)	ﾋﾞｽ
3	PSHT-0107FCZZ	AF	DS	N	C	LSU shutter	LSU ｼｬｯﾀｰ
4	LFRM-1151FCZZ	AL	EB	N	C	Shutter frame	ｼｬｯﾀｰﾌﾚｰﾑ
5	MSPRD3394FCZZ	AA	DJ	N	C	Shutter spring	ｼｬｯﾀｰｽﾌﾟﾘﾝｸﾞ
6	NBRGP0753FCZZ	AB	DJ	N	C	Shutter baring	ｼｬｯﾀｰ軸受
7	MSPRT3393FCZZ	AB	DJ	N	C	Shutter lever arm spring	ｼｬｯﾀｰﾚﾊﾞｰｱｰﾑｽﾌﾟﾘﾝｸﾞ
8	MSPRD3395FCZZ	AC	DJ	N	C	Shutter lock spring	ｼｬｯﾀｰﾛｯｸｽﾌﾟﾘﾝｸﾞ
9	XHBS730P08000	AB	DD		C	Screw(3×8)	ﾋﾞｽ
10	XEBS730P08000	AC	DD		C	Screw(3×8)	ﾋﾞｽ
11	LX-BZ1039FCZZ	AC	DD	N	C	Screw	ﾋﾞｽ
12	NSFTZ2910FCZZ	BR	LP	N	C	LSU shaft L	LSU ｼｬﾌﾄ L
13	LPLTM6513FCZZ	AC	DJ	N	C	LSU shaft fixing plate	LSU ｼｬﾌﾄ固定板
14	LPLTM6512FCZZ	AC	DJ	N	C	LSU inclination adjust plate	LSU 傾き調整板
15	XBPS730P06KS0	AB	DD		C	Screw(3×6KS)	ﾋﾞｽ
16	XHPS740P08KS0	AD	DJ		C	Screw(4×8KS)	ﾋﾞｽ
17	DUNT-7472DS12	CM	UW	N	E	LSU [MX-2300G/FG/N]	LSU
	DUNT-7472DS13	CM	UW	N	E	LSU [MX-2700G/FG/N]	LSU
18	CPWBX1662DS53	BR	LX	N	E	LSU control PWB [MX-2300G/FG/N]	LSU ｺﾝﾄﾛｰﾙ基板
	CPWBX1662DS51	BR	LX	N	E	LSU control PWB [MX-2700G/FG/N]	LSU ｺﾝﾄﾛｰﾙ基板
19	RMOTP0916FCZZ	BN	LE	N	B	Polygon motor	ﾎﾟﾘｺﾞﾝﾓｰﾀｰ
20	CPWBF1661FCE1	AS	EQ	N	E	BD PWB	BD 基板
21	CPWBF1674FC31	AL	EB	N	E	LSU thermistor PWB	LSU ｻｰﾐｽﾀｰ基板
22	XRESP80-08000	AA	DD		C	E ring(E8)	E ﾘﾝｸﾞ
23	NSFTZ2911FCZZ	AU	EZ	N	C	LSU shaft R	LSU ｼｬﾌﾄ R
24	LSTPP0384FCZZ	AB	DJ	N	C	DV stopper	DV ｽﾄｯﾊﾟｰ
25	CPLTM6539FC01	AW	FG		C	Middle base plate	中間ﾍﾞｰｽ板
26	PGiDM2154FCZZ	AG	DS	N	C	DV guide Y	DV ｶﾞｲﾄﾞ Y
27	LPLTM6538FCZZ	AS	EQ	N	C	LSU lower plate	LSU 下ﾌﾟﾚｰﾄ
28	MARMP0338FCZZ	AE	DS	N	C	Shutter lever arm	ｼｬｯﾀｰﾚﾊﾞｰｱｰﾑ
29	LSTYM0354FCZZ	AP	EQ	N	C	Middle stay	中間ｽﾃｰ
30	LRALM0237FCZZ	AG	DX	N	C	Transfer rail	転写ﾚｰﾙ

21 LSU 部 (LSU section)

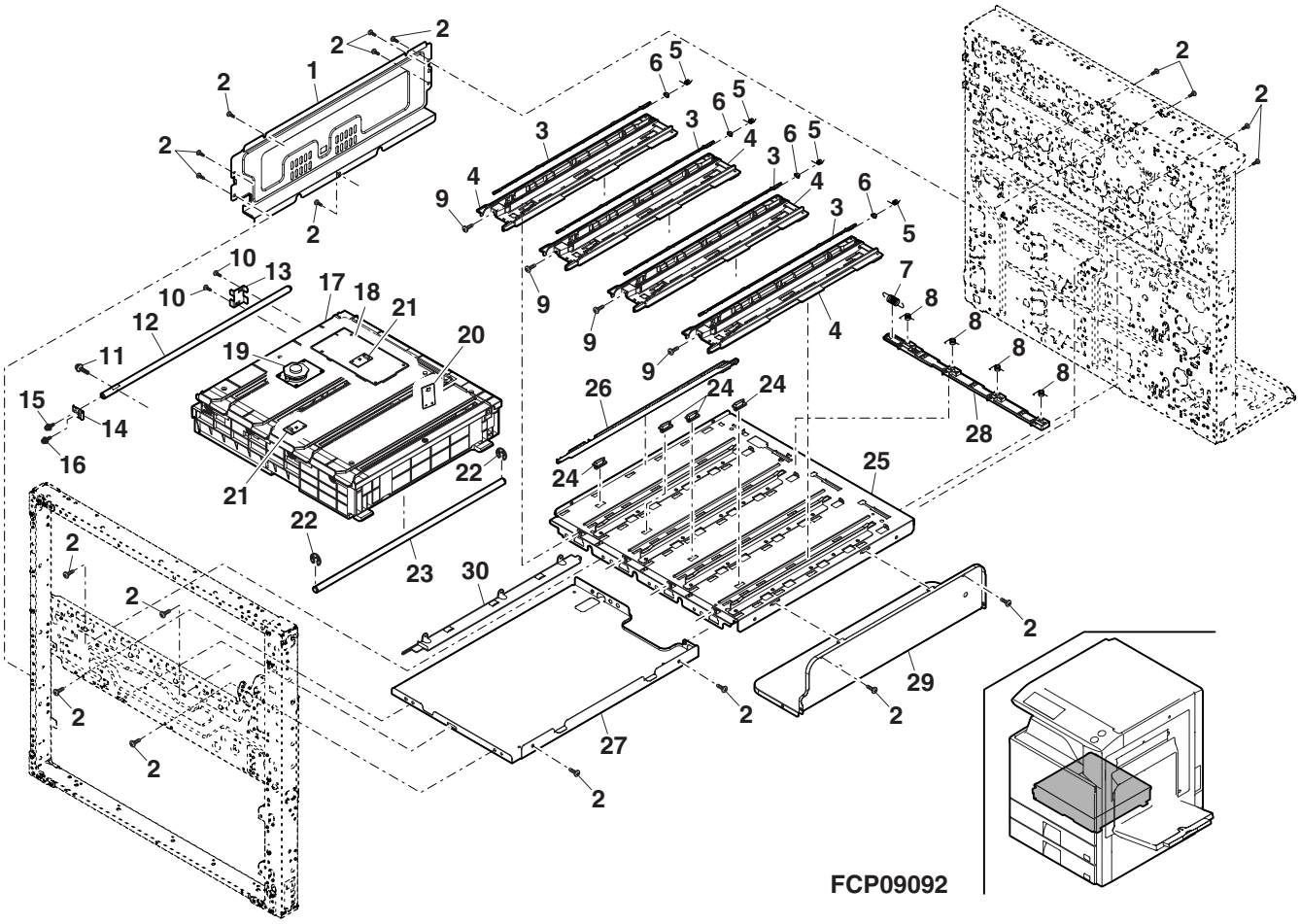

22 DV ﾕﾆｯﾄ 1(DV unit 1)

NO.	PARTS CODE	PRICE RANK Ex.	PRICE RANK Ja.	NEW MARK	PART RANK	DESCRIPTION	
1	PSHEZ5382FCZ1	AE	DJ	N	C	DV shutter suede	DV ｼｬｯﾀｰｽｴｰﾄﾞ
2	LHLDZ1669FCZZ	AD	DJ	N	C	DV holder TN	DV ﾎﾙﾀﾞｰ TN
3	XEBS730P08000	AC	DD		C	Screw(3×8)	ﾋﾞｽ
4	MSPRC3530FCZZ	AB	DJ	N	C	DV pressure spring	DV 圧接ｽﾌﾟﾘﾝｸﾞ
5	NSFTZ3018FCZZ	AL	EB	N	C	DV pressure shaft	DV 圧接ｼｬﾌﾄ
6	PSEL-0919FCZ1	AD	DJ	N	C	DV box seal C	DV ﾎﾞｯｸｽｼｰﾙ C
7	PSHT-0105FCZ1	AB	DJ	N	C	DV shutter	DV ｼｬｯﾀｰ
8	MSPRC3364FCZZ	AA	DJ	N	C	DVS spring TN	DVS ｽﾌﾟﾘﾝｸﾞ TN
9	XRESP25-04000	AA	DD		C	E ring(E2.5)	E ﾘﾝｸﾞ
10	PSEL-0957FCZZ	AB	DJ	N	C	DV cover U seal	DV ｶﾊﾞｰ U ｼｰﾙ
11	LPLTM6766FCZZ	AD	DJ	N	C	DSD plate	DSD ﾌﾟﾚｰﾄ
12	PCOVP1844FCZZ	AK	EB	N	D	DV cover U	DV ｶﾊﾞｰ U
13	XBBS730P06000	AC	DD		C	Screw(3×6)	ﾋﾞｽ
14	CGiDM2151DS51	AM	EG	N	C	DSD AS	DSD AS
15	PSEL-0918FCZ1	AD	DJ	N	C	Supply hole seal	補給口ｼｰﾙ
17	PGiDM2132FCZZ	AC	DJ	N	C	DV guide FD	DV ｶﾞｲﾄﾞ FD
18	LPLTM5714FCZZ	AB	DJ		C	M3 plate	M3 ﾌﾟﾚｰﾄ
19	PCOVP1847FCZZ	AC	DJ	N	D	DV cover FD	DV ｶﾊﾞｰ FD
20	LX-BZ1037FCZZ	AD	DJ	N	C	DV step screw	DV 段ﾋﾞｽ
21	PGiDM2131FCZZ	AM	EG	N	C	DV guide D(BK)	DV ｶﾞｲﾄﾞ D(BK)
	PGiDM2131FCZ1	AM	EG	N	C	DV guide D(C)	DV ｶﾞｲﾄﾞ D(C)
	PGiDM2131FCZ2	AM	EG	N	C	DV guide D(M)	DV ｶﾞｲﾄﾞ D(M)
	PGiDM2131FCZ3	AM	EG	N	C	DV guide D(Y)	DV ｶﾞｲﾄﾞ D(Y)
22	UCLEZ0180FCZ1	AE	DJ	N	C	DV blade N	DV ﾌﾞﾚｰﾄﾞ N
24	PCOVP1846FCZZ	AG	DS	N	D	DV cover R	DV ｶﾊﾞｰ R
25	PSEL-0930FCZZ	AC	DJ	N	C	DV cover R seal	DV ｶﾊﾞｰ R ｼｰﾙ
26	XRESP50-06000	AA	DD		C	E ring(E5)	E ﾘﾝｸﾞ
28	LX-BZ0656FCP1	AD	DJ	N	C	Process fixing screw N	ﾌﾟﾛｾｽ固定ﾋﾞｽ N
29	XRESP30-06000	AA	DD		C	E ring(E3)	E ﾘﾝｸﾞ
30	LX-BZ0045QSZZ	AC	DD	N	C	Red screw(3×8)	赤ﾋﾞｽ
31	PSHEZ5378FCZZ	AD	DJ	N	A	Duct sheet	ﾀﾞｸﾄﾏｲﾗｰ
32	PSEL-0956FCZZ	AE	DJ	N	A	DV cleaning seal	DV ｸﾘｰﾆﾝｸﾞｼｰﾙ
33	TLABH4997FCZZ	AA	DJ	N	D	Color label(BK)	ｶﾗｰﾗﾍﾞﾙ (BK)
	TLABH4998FCZZ	AA	DJ	N	D	Color label(C)	ｶﾗｰﾗﾍﾞﾙ (C)
	TLABH4999FCZZ	AA	DJ	N	D	Color label(M)	ｶﾗｰﾗﾍﾞﾙ (M)
	TLABH5000FCZZ	AA	DJ	N	D	Color label(Y)	ｶﾗｰﾗﾍﾞﾙ (Y)
501	CCOVP1846DS51	AN	EQ	N	E	DV cover R unit	DV ｶﾊﾞｰ R ﾕﾆｯﾄ
	(Unit)						
901	DUNT-7444DSZZ	BR	LX	N	E	DV unit(BK) (Include Block[23])	DV ﾕﾆｯﾄ (BK)
	DUNT-7444DS11	BR	LX	N	E	DV unit(C) (Include Block[23])	DV ﾕﾆｯﾄ (C)
	DUNT-7444DS12	BR	LX	N	E	DV unit(M) (Include Block[23])	DV ﾕﾆｯﾄ (M)
	DUNT-7444DS13	BR	LX	N	E	DV unit(Y) (Include Block[23])	DV ﾕﾆｯﾄ (Y)

22 DV ユニット 1(DV unit 1)

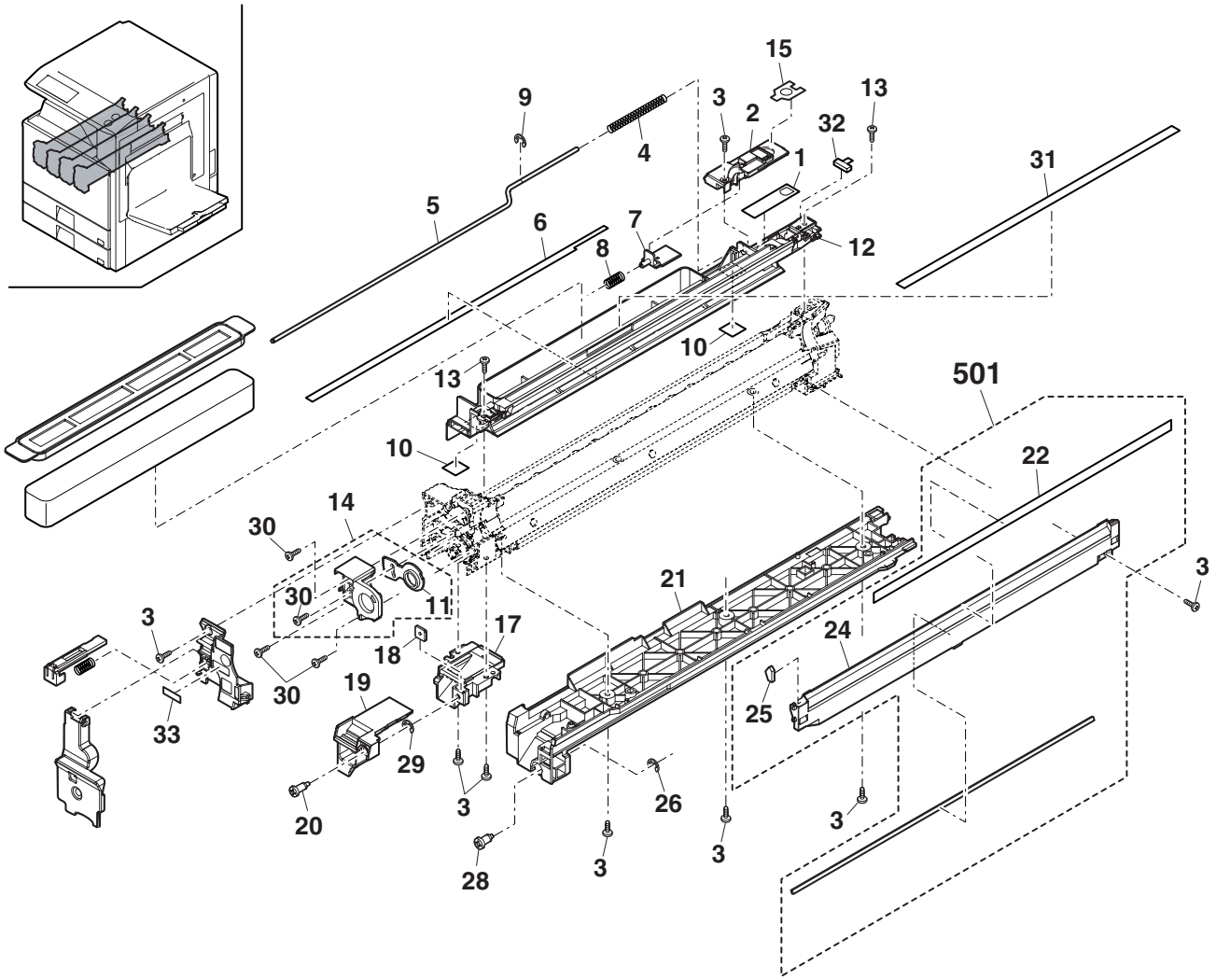

FCP09093

23 DV ﾕﾆｯﾄ 2(DV unit 2)

NO.	PARTS CODE	PRICE RANK Ex.	PRICE RANK Ja.	NEW MARK	PART RANK	DESCRIPTION	
1	NPLYZ0490FCZZ	AB	DJ	N	C	MG pulley	MG ﾌﾟｰﾘｰ
2	XBPS730P06KS0	AB	DD		C	Screw(3×6KS)	ﾋﾞｽ
3	CPLYZ0448FC02	AQ	EQ	N	C	DID pulley	DID ﾌﾟｰﾘｰ
4	NBLTH0494FCZZ	AD	DJ	N	B	DV belt B	DV ﾍﾞﾙﾄ B
5	NBRGC0757FCZZ	AC	DJ	N	C	Bearing	BRG-DID
6	XRESP50-06000	AA	DD		C	E ring(E5)	E ﾘﾝｸﾞ
7	XEBS730P08000	AC	DD		C	Screw(3×8)	ﾋﾞｽ
8	CPLTM6528FC01	AG	DX	N	B	DID plate	DID-PLT AS
9	CHLDZ1680FC01	AD	DJ	N	C	MG holder	MG ﾎﾙﾀﾞｰ
10	NBLTH0445FCZ1	AD	DJ	N	B	DV belt	DV ﾍﾞﾙﾄ
11	NPLYZ0449FCZ1	AP	EQ	N	C	DMX pulley	DMX ﾌﾟｰﾘｰ
12	NPLYZ0450FCZ1	AC	DJ	N	C	MG pulley DMX	MG ﾌﾟｰﾘｰ DMX
13	XRESP40-06000	AA	DD		C	E ring(E4)	E ﾘﾝｸﾞ
14	NBRGC0020QSZZ	AH	DX		C	Bearing(DMXBRGF6/14)	軸受
15	PSEL-0915FCZ1	AD	DJ	N	A	DV side seal R	DV ｻｲﾄﾞｼｰﾙ R
16	PSEL-0917FCZZ	AB	DJ	N	C	DV box seal F	DV ﾎﾞｯｸｽｼｰﾙ F
18	LPLTM5714FCZZ	AB	DJ		C	M3 plate	M3 ﾌﾟﾚｰﾄ
20	PCOVP1866FCZZ	AC	DJ	N	D	DV cover MGB	DV ｶﾊﾞｰ MGB
21	LPiNS0133FCZZ	AA	DD		C	Pin(2-10)	平行ﾋﾟﾝ
22	NROLM1536FCZ1	BB	GD	N	C	MG roller	MG ﾛｰﾗｰ
23	RDTCT0165FCZZ	AX	FG	N	B	ATC sensor(BK)	ATC ｾﾝｻｰ (BK)
	RDTCT0166FCZZ	AX	FG	N	B	ATC sensor(C)	ATC ｾﾝｻｰ (C)
	RDTCT0167FCZZ	AX	FG	N	B	ATC sensor(M)	ATC ｾﾝｻｰ (M)
	RDTCT0168FCZZ	AX	FG	N	B	ATC sensor(Y)	ATC ｾﾝｻｰ (Y)
24	XEBS730P05000	AA	DD		C	Screw(3×5)	ﾋﾞｽ
25	PBOX-0147FCZZ	AN	EG	N	D	DV box	DV ﾎﾞｯｸｽ
26	PSEL-0914FCZZ	AD	DJ	N	A	DV side seal F	DV ｻｲﾄﾞｼｰﾙ F
27	PSEL-0916FCZZ	AD	DJ	N	C	DV box seal B	DV ﾎﾞｯｸｽｼｰﾙ B
28	LHLDZ1642FCZZ	AC	DJ	N	C	MG holder F	MG-HLD-F
29	LPLTM6527FCZZ	AC	DJ	N	C	PP plate	PP ﾌﾟﾚｰﾄ
30	DHAi-3834FCZZ	AD	DJ	N	C	BIAS harness B	BIAS ﾊｰﾈｽ B
31	NROLP1515FCZ1	AN	EQ	N	C	DMX roller L	DMX ﾛｰﾗｰ L
32	NROLP1514FCZZ	AN	EQ	N	C	DMX roller R	DMX ﾛｰﾗｰ R
33	QSLP-0209FCZZ	AC	DJ	N	B	DV plug	DV 端子
34	XEBS730P10000	AC	DD		C	Screw(3×10)	ﾋﾞｽ
35	DHAi-3833FCZZ	AD	DJ	N	C	BIAS harness A	BIAS ﾊｰﾈｽ A
36	PCOVP1845FCZZ	AD	DJ	N	D	DV cover B	DV ｶﾊﾞｰ B
37	LPLTM6441FCZ1	AN	EQ	N	C	DV doctor	DV ﾄﾞｸﾀｰ
38	XBBBZ30P04000	AA	DD	N	C	Screw(3×4)	ﾋﾞｽ
39	DHAi-3711FCZ1	AN	EG	N	C	DV harness	DV ﾊｰﾈｽ
40	CPWBF1674FC32	AG	DX	N	E	DV initial detect PWB	DV ｲﾆｼｬﾙ検知基板
41	LPLTM6442FCZZ	AS	EQ	N	C	Doctor reinforce plate	ﾄﾞｸﾀｰ補強板
42	PSEL-0925FCZZ	AD	DJ	N	A	Doctor seal	ﾄﾞｸﾀｰｼｰﾙ
43	XBBS730P06000	AC	DD		C	Screw(3×6)	ﾋﾞｽ
44	LHLDZ1643FCZZ	AC	DJ	N	C	DV holder F	DV ﾎﾙﾀﾞｰ F
45	NGERH1653FCZZ	AC	DJ	N	C	DMX gear(24T)	DMX ｷﾞｬ
46	PSEL-0922FCZZ	AD	DJ	N	C	DV lower seal	DV 下ｼｰﾙ
47	NBRGY0769FCZZ	AQ	EQ	N	C	MG bearing	MG ﾍﾞｱﾘﾝｸﾞ
	(Unit)						
901	DUNT-7444DSZZ	BR	LX	N	E	DV unit(BK) (Include Block[22])	DV ﾕﾆｯﾄ (BK)
	DUNT-7444DS11	BR	LX	N	E	DV unit(C) (Include Block[22])	DV ﾕﾆｯﾄ (C)
	DUNT-7444DS12	BR	LX	N	E	DV unit(M) (Include Block[22])	DV ﾕﾆｯﾄ (M)
	DUNT-7444DS13	BR	LX	N	E	DV unit(Y) (Include Block[22])	DV ﾕﾆｯﾄ (Y)

23 DV ユニット 2(DV unit 2)

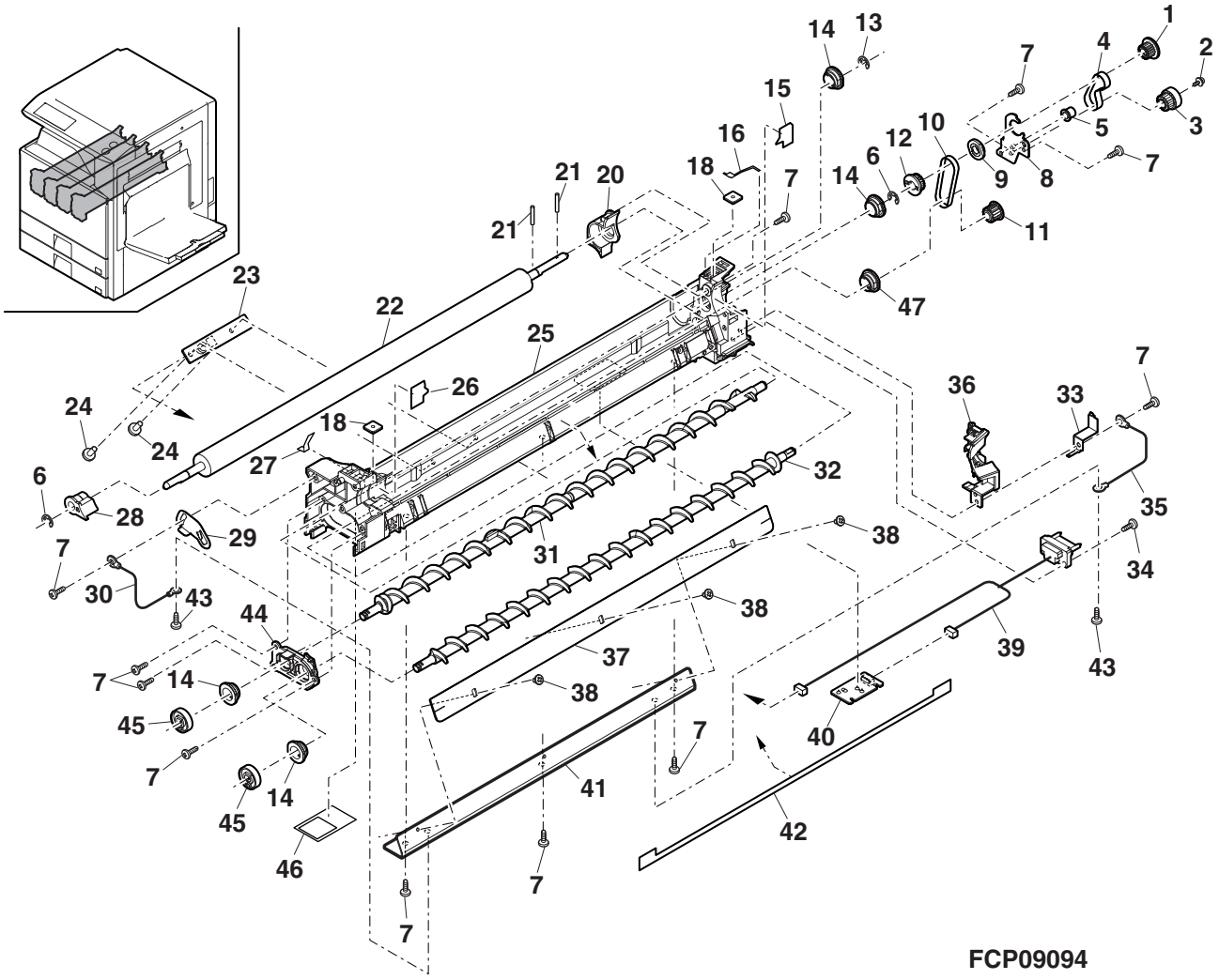

24 ﾌﾟﾛｾｽﾕﾆｯﾄ (Process unit)

NO.	PARTS CODE	PRICE RANK Ex.	PRICE RANK Ja.	NEW MARK	PART RANK	DESCRIPTION	
1	CSFTZ2918DS51	AQ	EQ	N	E	Drum shaft	ﾄﾞﾗﾑｼｬﾌﾄ
2	CHLDZ1647DS51	AY	FQ	N	E	MCU	MCU
3	PSHEZ5360FCZZ	AF	DS	N	C	MCU case sheeet	MC ｹｰｽｼｰﾄ
4	XEBS730P10000	AC	DD		C	Screw(3×10)	ﾋﾞｽ
6	PMLT-1433FCZZ	AD	DJ	N	C	Case cushion	ｹｰｽﾓﾙﾄ
9	NSFTZ2890FCZ1	AE	DS	N	C	MC cleaner shaft	MC ｸﾘｰﾅｰ軸
10	PSHEZ5359FCZ1	AF	DJ	N	A	Drum toner receive sheet	ﾄﾞﾗﾑﾄﾅｰ受けｼｰﾄ
11	PSEL-0913FCZ2	AD	DJ	N	A	Side seal R	ｻｲﾄﾞｼｰﾙ R
12	LX-BZ1016FCZZ	AB	DD	N	C	CL fixing screw	CL 固定ﾋﾞｽ
13	PSEL-0912FCZ2	AD	DJ	N	A	Side seal F	ｻｲﾄﾞｼｰﾙ F
14	UCLEZ0179FCZ1	AP	EQ	N	A	Cleaning blade	ｸﾘｰﾆﾝｸﾞﾌﾞﾚｰﾄﾞ
15	PMLT-1420FCZZ	AA	DJ	N	C	Side cushion	ｻｲﾄﾞﾓﾙﾄ
17	PMLT-1419FCZZ	AD	DJ	N	C	Blade cushion	ﾌﾞﾚｰﾄﾞﾓﾙﾄ
18	TLABH4997FCZZ	AA	DJ	N	D	Color label(BK)	ｶﾗｰﾗﾍﾞﾙ (BK)
	TLABH4998FCZZ	AA	DJ	N	D	Color label(C)	ｶﾗｰﾗﾍﾞﾙ (C)
	TLABH4999FCZZ	AA	DJ	N	D	Color label(M)	ｶﾗｰﾗﾍﾞﾙ (M)
	TLABH5000FCZZ	AA	DJ	N	D	Color label(Y)	ｶﾗｰﾗﾍﾞﾙ (Y)
19	QEARP0192FCZZ	AC	DJ	N	C	Blade earth plate	ﾌﾞﾚｰﾄﾞｱｰｽ板
21	PMLT-1421FCZZ	AB	DJ	N	C	DL cushion	DL ﾓﾙﾄ
22	PMLT-1422FCZZ	AB	DJ	N	C	Duct cushion	ﾀﾞｸﾄﾓﾙﾄ
23	PCOVP1849FCZZ	AC	DJ	N	D	Process R cover	ﾌﾟﾛｾｽ R ｶﾊﾞｰ
24	NCPL-0079FCZZ	AC	DJ	N	C	Screw coupling	ｽｸﾘｭｰｶｯﾌﾟﾘﾝｸﾞ
25	NBRGP0748FCZZ	AQ	EQ	N	C	Waste toner bearing	廃ﾄﾅｰ軸受
26	NSRW-0040FCZZ	AH	DX	N	C	Waste toner screw	廃ﾄﾅｰｽｸﾘｭｰ
29	MLEVP0962FCZZ	AC	DJ	N	C	Lock lever	ﾛｯｸﾚﾊﾞｰ
30	MSPRC3360FCZZ	AA	DJ	N	C	Lock lever spring	ﾛｯｸﾚﾊﾞｰｽﾌﾟﾘﾝｸﾞ
31	CSFTZ2891FC01	AF	DS	N	C	Drum fixing shaft	ﾄﾞﾗﾑ固定軸
33	PPｉPP0213FCZZ	AC	DJ	N	C	Drum waste toner pipe	ﾄﾞﾗﾑ廃ﾄﾅｰﾊﾟｲﾌﾟ
34	NBRGP0746FCZZ	AQ	EQ	N	C	Cleaner bearing	ｸﾘｰﾅｰ軸受
36	PRNGP0081FCZZ	AA	DJ		C	Resin ring(E4)	樹脂ﾘﾝｸﾞ
37	PMLT-1439FCZZ	AC	DJ	N	C	Shutter cushion	ｼｬｯﾀｰﾓﾙﾄ
38	MSPRC3359FCZZ	AA	DJ	N	C	Shutter spring	ｼｬｯﾀｰｽﾌﾟﾘﾝｸﾞ
39	PSHT-0106FCZZ	AC	DJ	N	C	Waste toner shutter	廃ﾄﾅｰｼｬｯﾀｰ
40	PCOVP1840FCZZ	AF	DS	N	D	Process F cover	ﾌﾟﾛｾｽ F ｶﾊﾞｰ
41	TLABH4996FCZZ	AA	DJ	N	D	Arrow label(BK)	矢印ﾗﾍﾞﾙ (BK)
	TLABH4995FCZZ	AA	DJ	N	D	Arrow label(C)	矢印ﾗﾍﾞﾙ (C)
	TLABH4994FCZZ	AA	DJ	N	D	Arrow label(M)	矢印ﾗﾍﾞﾙ (M)
	TLABH4993FCZ1	AB	DJ	N	D	Arrow label(Y)	矢印ﾗﾍﾞﾙ (Y)
	(Unit)						
901	CFRM-1152DS52	BD	GN	N	E	Process unit	ﾌﾟﾛｾｽﾕﾆｯﾄ

25 1 次転写ｸﾘｰﾅｰﾕﾆｯﾄ (1st transfer cleaner unit)

NO.	PARTS CODE	PRICE RANK Ex.	PRICE RANK Ja.	NEW MARK	PART RANK	DESCRIPTION	
1	NGERH1670FCZZ	AC	DJ	N	C	Cleaner idle gear	ｸﾘｰﾅｰｱｲﾄﾞﾙｷﾞﾔ
2	NGERH1669FCZZ	AC	DJ	N	C	Cleaner gear	ｸﾘｰﾅｰｷﾞﾔ
3	JHNDP0166FCZZ	AC	DJ		C	DV handle	DV ﾊﾝﾄﾞﾙ
4	LFRM-1153FCZ1	AN	EG	N	C	Cleaner frame	ｸﾘｰﾅｰﾌﾚｰﾑ
5	PMLT-1409FCZ1	AA	DJ	N	C	Cleaner cushion	ｸﾘｰﾅﾓﾙﾄ
6	PSEL-0932FCZ1	AC	DJ	N	C	Cleaner seal R	ｸﾘｰﾅｼｰﾙ R
8	PSEL-0911FCZ1	AC	DJ	N	C	Cleaner seal	ｸﾘｰﾅｼｰﾙ
9	PPｉPP0214FCZZ	AD	DJ	N	C	Tranfer toner pipe	転写廃ﾄﾅｰﾊﾟｲﾌﾟ
10	MSPRC3359FCZZ	AA	DJ	N	C	Shutter spring	ｼｬｯﾀｰｽﾌﾟﾘﾝｸﾞ
11	NBRGP0746FCZZ	AQ	EQ	N	C	Cleaner bearing	ｸﾘｰﾅｰ軸受
12	PRNGP0081FCZZ	AA	DJ		C	Resin ring(E4)	樹脂ﾘﾝｸﾞ
14	PSHT-0106FCZZ	AC	DJ	N	C	Waste toner shutter	廃ﾄﾅｰｼｬｯﾀｰ
15	PCOVP1825FCZZ	AD	DJ	N	D	Cleaner cover	ｸﾘｰﾅｰｶﾊﾞｰ
16	XEBS740P10000	AA	DD		C	Screw(4×10)	ﾋﾞｽ
17	PMLT-1410FCZZ	AC	DJ	N	C	Transfer brade cushion	転写ﾌﾞﾚｰﾄﾞﾓﾙﾄ
18	NSRW-0040FCZZ	AH	DX	N	C	Waste toner screw	廃ﾄﾅｰｽｸﾘｭｰ
20	LPLTM6565FCZZ	AG	DX	N	C	Transfer guide plate upper	転写ｶﾞｲﾄﾞ板上
21	PMLT-1439FCZZ	AC	DJ	N	C	Shutter cushion	ｼｬｯﾀｰﾓﾙﾄ
22	LX-BZ0858FCZZ	AA	DD		C	MCR fixing screw	MCR 固定ﾋﾞｽ
23	PSHEZ5469FCZZ	AN	EQ	N	C	Paper dust churning sheet	紙粉攪拌ｼｰﾄ
24	PTPE-0026QSZZ	AA	DJ		C	Screw tape	ｽｸﾘｭｰﾃｰﾌﾟ
	(Unit)						
901	CFRM-1153DS51	AZ	FQ	N	E	1st transfer cleaner unit	1 次転写ｸﾘｰﾅｰﾕﾆｯﾄ

24 ﾌﾟﾛｾｽﾕﾆｯﾄ (Process unit)

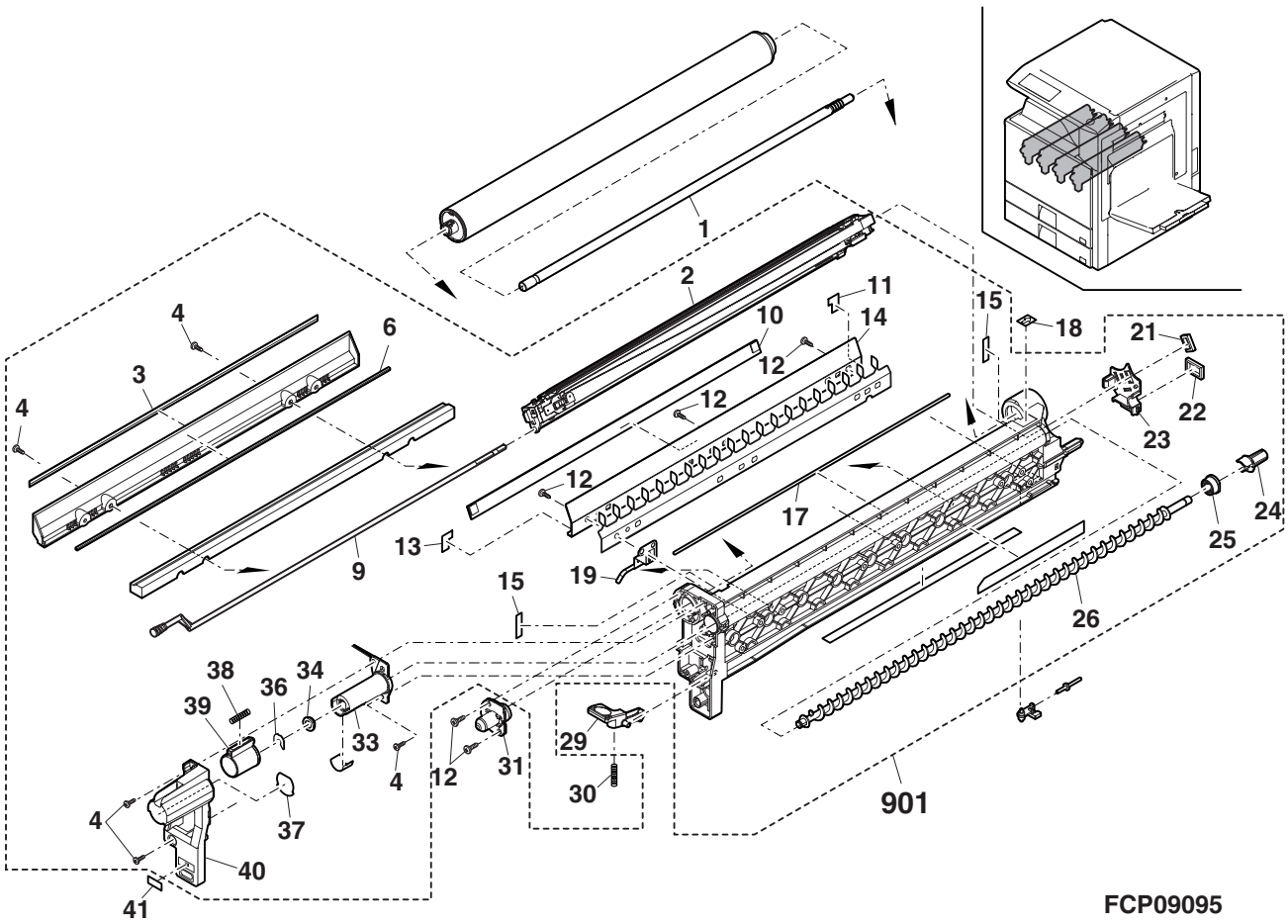

25 1 次転写ｸﾘｰﾅｰﾕﾆｯﾄ (1st transfer cleaner unit)

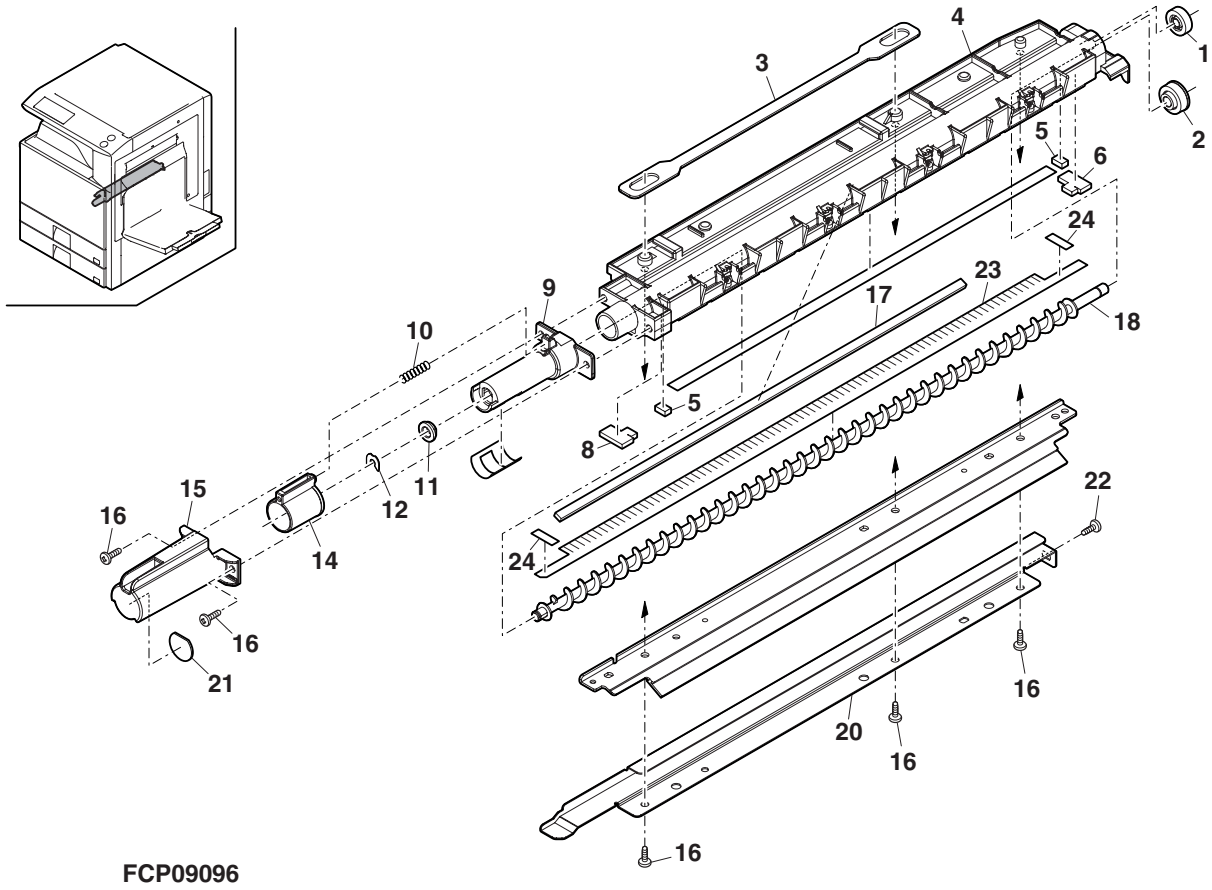

26 1 次転写ﾕﾆｯﾄ 1(1st transfer unit 1)

NO.	PARTS CODE	PRICE RANK Ex.	PRICE RANK Ja.	NEW MARK	PART RANK	DESCRIPTION	
2	LX-BZ0858FCZZ	AA	DD		C	MCR fixing screw	MCR 固定ﾋﾞｽ
3	NBLTH0434FCZZ	BF	GN	N	A	Middle transfer belt	中間転写ﾍﾞﾙﾄ
4	LPiNS0155FCZZ	AA	DD		C	Pin(3-10)	平行ﾋﾟﾝ
5	XRESP50-06000	AA	DD		C	E ring(E5)	E ﾘﾝｸﾞ
6	MCAMP0115FCZZ	AC	DJ	N	C	Transfer cum R	転写ｶﾑ R
7	PGiDM2157FCZZ	AC	DJ	N	C	Block link guide	ﾌﾞﾛｯｸﾘﾝｸｶﾞｲﾄﾞ
9	XEPS730P08XS0	AB	DD	N	C	Screw(3×8XS)	ﾋﾞｽ
10	NSFTZ2905FCZZ	BQ	LP	N	C	Transfer cum shaft	転写ｶﾑ軸
11	MCAMP0111FCZZ	AC	DJ	N	C	Transfer cum F	転写ｶﾑ F
12	NGERH1632FCZZ	AC	DJ	N	C	Separate coupling	離接ｶｯﾌﾟﾘﾝｸﾞｷﾞｬ
13	CSPRD3367FC01	AG	DX	N	C	1st tranfer print spring K	1 次転写印加ｽﾌﾟﾘﾝｸﾞ K
14	NBRGP0750FCZZ	AC	DJ	N	C	Tranfer cum bearing	転写ｶﾑ軸受
15	NBRGP0674FCZZ	AE	DJ		C	Belt idle bearing	ﾍﾞﾙﾄｱｲﾄﾞﾙ軸受
16	LX-BZ1005FCZZ	AC	DD	N	C	Transfer unit fixing step screw	転写ﾕﾆｯﾄ固定段ﾋﾞｽ
17	CFRM-1170FC01	AQ	EQ	N	C	Transfer front frame	転写前ﾌﾚｰﾑ
18	XEBS740P08000	AA	DD		C	Screw(4×8)	ﾋﾞｽ
19	MCAMP0116FCZZ	AC	DJ	N	C	CRU incorrect insertion prevention cum	CRU 誤挿入防止ｶﾑ
20	MSPRC3363FCZZ	AC	DJ	N	C	Bottle lock lever spring	ﾎﾞﾄﾙﾛｯｸﾚﾊﾞｰｽﾌﾟﾘﾝｸﾞ
21	MLEVP0937FCZZ	AD	DJ	N	C	Lock link lever	ﾛｯｸﾘﾝｸﾚﾊﾞｰ
22	MLEVP0966FCZZ	AE	DJ	N	C	Waste toner bottol lock lever	廃ﾄﾅｰﾎﾞﾄﾙﾛｯｸﾚﾊﾞｰ
23	PCOVP1852FCZZ	AT	EZ	N	D	Transfer front cover	転写前ｶﾊﾞｰ
24	TLABH5030FCZZ	AB	DJ	N	D	Color label(Y)	ｶﾗｰﾗﾍﾞﾙ(Y)
25	TLABH5029FCZZ	AA	DJ	N	D	Color label(M)	ｶﾗｰﾗﾍﾞﾙ(M)
26	TLABH5028FCZZ	AA	DJ	N	D	Color label(C)	ｶﾗｰﾗﾍﾞﾙ(C)
27	TLABH5027FCZZ	AA	DJ	N	D	Color label(BK)	ｶﾗｰﾗﾍﾞﾙ(BK)
28	PMAGT0015FCPZ	AF	DS	N	C	Magnet catch(10P)	ﾏｸﾞﾈｯﾄｷｬｯﾁ
29	XRESP40-06000	AA	DD		C	E ring(E4)	E ﾘﾝｸﾞ
30	LX-BZ1007FCZZ	AD	DJ	N	C	Transfer front cover screw	転写前ｶﾊﾞｰﾋﾞｽ
31	NBRGP0745FCZZ	AC	DJ	N	C	Follower roller position fixing bearing	従動ﾛｰﾗｰ位置固定軸受
32	XHBS740P08000	AA	DD		C	Screw(4×8)	ﾋﾞｽ
33	NBRGP0744FCZZ	AB	DJ	N	C	Insulate bearing	絶縁軸受
34	TLABH4993FCZ1	AB	DJ	N	D	Arrow label(Y)	矢印ﾗﾍﾞﾙ(Y)
35	TLABH4994FCZZ	AA	DJ	N	D	Arrow label(M)	矢印ﾗﾍﾞﾙ(M)
36	TLABH4995FCZZ	AA	DJ	N	D	Arrow label(C)	矢印ﾗﾍﾞﾙ(C)
37	TLABH4996FCZZ	AA	DJ	N	D	Arrow label(BK)	矢印ﾗﾍﾞﾙ(BK)
38	LX-BZ1033FCZZ	AA	DD	N	C	Transfer separate screw left	転写離接ﾋﾞｽ左
41	XEBS730P08000	AC	DD		C	Screw(3×8)	ﾋﾞｽ
42	MLEVP0964FCZZ	AC	DJ	N	C	Protect lever	ﾌﾟﾛﾃｸﾄﾚﾊﾞｰ
43	LPLTM6568FCZZ	AP	EQ	N	C	Drum positioning plate	ﾄﾞﾗﾑ位置決めﾌﾟﾚｰﾄ
44	NBRGP0755FCZZ	AC	DJ	N	C	Drum positioning bearing	ﾄﾞﾗﾑ位置決め軸受
45	PCOVP1853FCZZ	AQ	EQ	N	C	Drum positioning cover	ﾄﾞﾗﾑ位置決めｶﾊﾞｰ
46	MSPRD3574FCZZ	AB	DJ	N	C	1st transfer print spring KA	1 次転写印加ｽﾌﾟﾘﾝｸﾞ -KA
47	LX-BZ0465FCZZ	AA	DD		C	Screw(4×8)	扁平ﾋﾞｽ
56	NROLS1634FCZZ	AX	FG	N	A	Transfer CL roller	転写 CL ﾛｰﾗｰ
	(Unit)						
901	DUNT-7445DS12	BX	TF	N	E	1st transfer unit (Include Block[25],[27],[28])	1 次転写ﾕﾆｯﾄ
902	CPLTM6568DS51	AZ	FQ	N	E	Drum positioning unit	ﾄﾞﾗﾑ位置決めﾕﾆｯﾄ

26 1 次転写ﾕﾆｯﾄ 1(1st transfer unit 1)

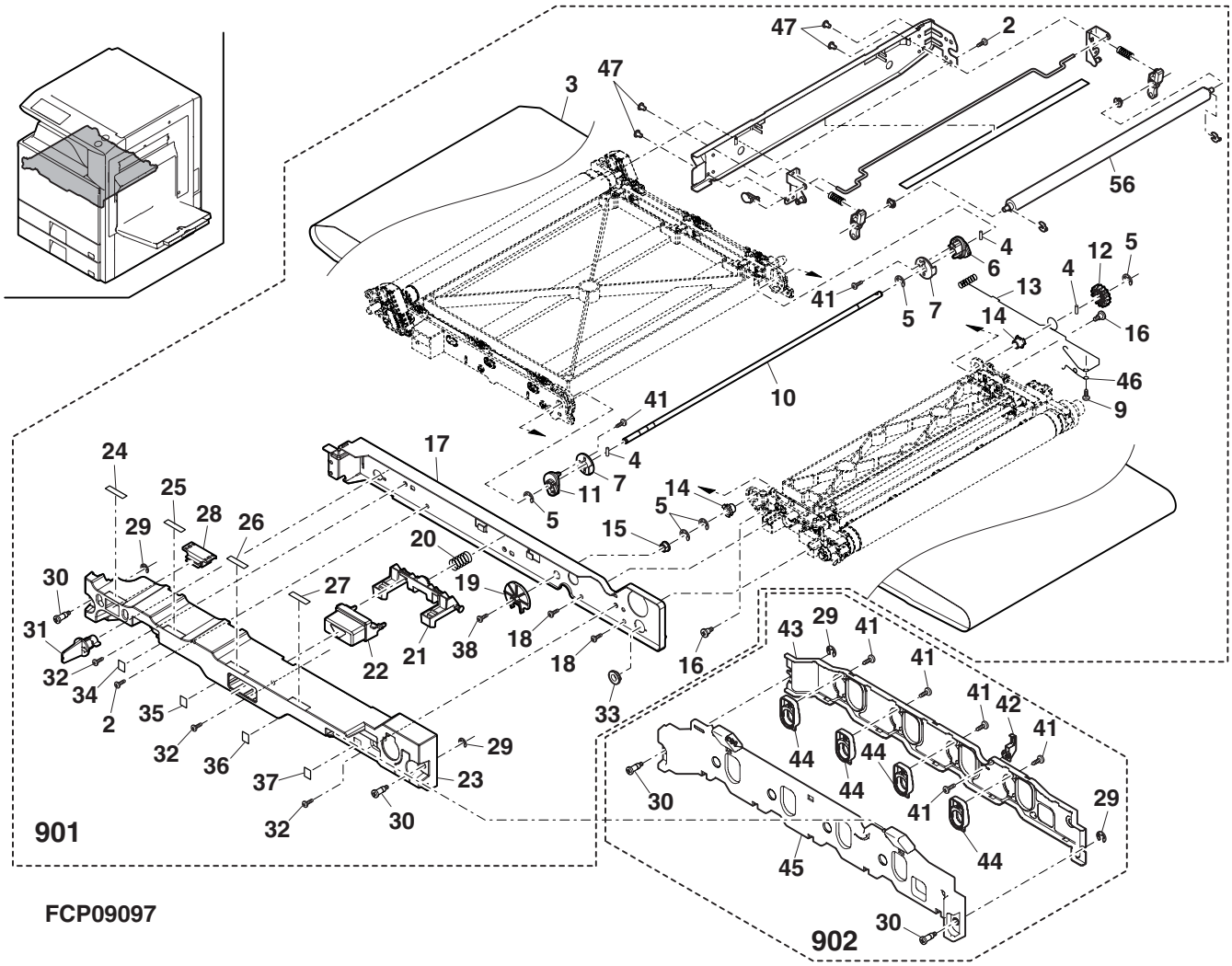

27 1 次転写ﾕﾆｯﾄ 2(1st transfer unit 2)

NO.	PARTS CODE	PRICE RANK Ex.	PRICE RANK Ja.	NEW MARK	PART RANK	DESCRIPTION	
1	MSPRC3347FCZZ	AD	DJ	N	C	1st tranfer link spring	1 次転写ﾘﾝｸｽﾌﾟﾘﾝｸﾞ
2	MLNKP0031FCZZ	AC	DJ	N	C	1st tranfer link BK R	1 次転写ﾘﾝｸ BK R
4	XEBS730P06000	AA	DD		C	Screw(3×6)	ﾋﾞｽ
5	MLNKP0030FCZZ	AC	DJ	N	C	1st tranfer link BK F	1 次転写ﾘﾝｸ BK F
6	MSPRT3389FCZZ	AB	DJ	N	C	1st transfer pressure spring	1 次転写加圧ｽﾌﾟﾘﾝｸﾞ
8	PCLR-0512FCZ1	AQ	EQ	N	A	1st transfer collar	1 次転写導電ｶﾗｰ
9	NROLM1553FCZZ	BR	LP	N	A	1st transfer roller	1 次転写ﾛｰﾗｰ
12	LX-BZ1012FCZZ	AB	DD	N	C	Link fixing screw	ﾘﾝｸ取付ﾋﾞｽ
13	NGERH1668FCZZ	AR	EQ	N	A	Belt drive gear	ﾍﾞﾙﾄ駆動ｷﾞﾔ
14	XRESP70-08000	AA	DD		C	E ring(E7)	E ﾘﾝｸﾞ
15	NBRGP0744FCZZ	AB	DJ	N	C	Insulate bearing	絶縁軸受
16	LFRM-1149FCZZ	AS	EZ	N	C	1st transfer frame K	1 次転写ﾌﾚｰﾑ K
18	PCLR-0511FCZZ	AC	DJ	N	C	Drive roller collar	駆動ﾛｰﾗｰｶﾗｰ
19	LPiNS0155FCZZ	AA	DD		C	Pin(3-10)	平行ﾋﾟﾝ
21	MSPRC3345FCZZ	AB	DJ	N	C	Resist sensor spring	ﾚｼﾞｾﾝｻｰｽﾌﾟﾘﾝｸﾞ
22	MLNKP0034FCZZ	AC	DJ	N	C	Resist back up link	ﾚｼﾞﾊﾞｯｸｱｯﾌﾟﾘﾝｸ
23	PCLR-0513FCZZ	AB	DJ	N	C	Resist back up collar	ﾚｼﾞﾊﾞｯｸｱｯﾌﾟｶﾗｰ
24	NSFTZ2906FCZZ	BQ	LP	N	C	Resist back up shaft	ﾚｼﾞﾊﾞｯｸｱｯﾌﾟｼｬﾌﾄ
25	NROLM1554FCZ1	AQ	EQ	N	C	Resist back up roller	ﾚｼﾞﾊﾞｯｸｱｯﾌﾟﾛｰﾗｰ
26	PCLR-0515FCZZ	AC	DJ	N	C	Resist insulate collar	ﾚｼﾞ絶縁ｶﾗｰ
27	PCLR-0514FCZZ	AB	DJ	N	C	Resist back up positioning collar	ﾚｼﾞﾊﾞｯｸｱｯﾌﾟ位置決めｶﾗｰ
28	DUNTK0233QSPZ	AH	DX		E	Resistor unit transfer	抵抗ﾕﾆｯﾄ転写
29	MSPRD3371FCZZ	AC	DJ	N	C	1st transfer earth spring	1 次転写ｱｰｽｽﾌﾟﾘﾝｸﾞ
30	QEARP0193FCZ1	AC	DJ	N	C	Drive roller earth electrode	駆動ﾛｰﾗｰｱｰｽ電極
31	NBRGC0801FCZZ	AE	DJ	N	C	Bearing(ϕ8-14)	導電軸受
32	XBBS730P04000	AA	DD		C	Screw(3×4)	ﾋﾞｽ
33	LX-WZ0421FCZZ	AA	DD		C	Poly slider(ϕ8-12)	ﾎﾟﾘｽﾗｲﾀﾞｰ
34	NBRGC0798FCZZ	AE	DS	N	C	Bearing(ϕ8-16)	軸受
35	LX-BZ0676FCZZ	AA	DD		C	Screw(4×10)	ﾋﾞｽ
36	LPLTP6711FCZ1	AC	DJ	N	C	Link fixing plate	ﾘﾝｸ押え板
37	XEBS740P08000	AA	DD		C	Screw(4×8)	ﾋﾞｽ
	(Unit)						
901	DUNT-7445DS12	BX	TF	N	E	1st transfer unit (Include Block[25],[26],[28])	1 次転写ﾕﾆｯﾄ

27 1 次転写ﾕﾆｯﾄ 2(1st transfer unit 2)

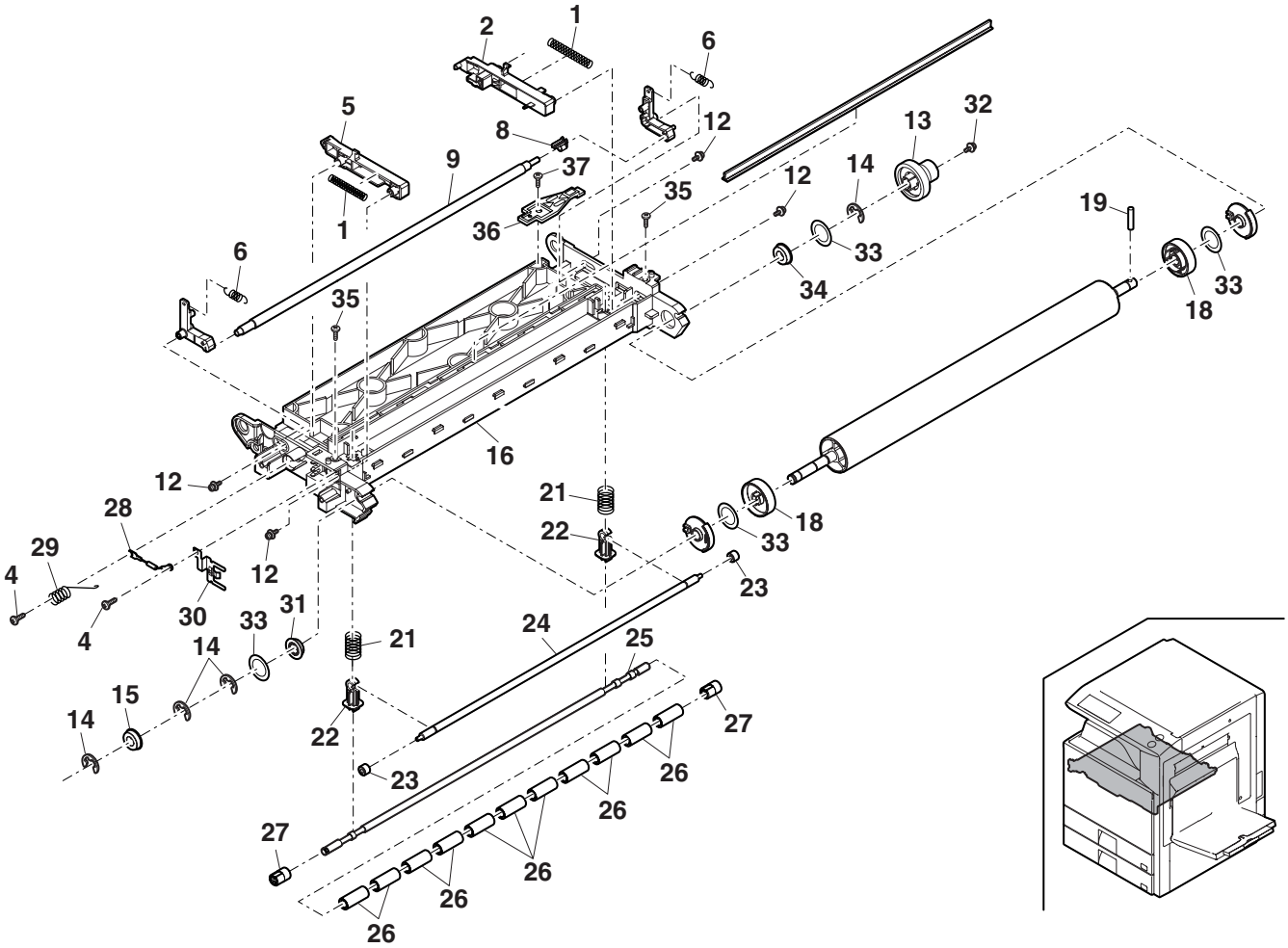

28 1 次転写ﾕﾆｯﾄ 3(1st transfer unit 3)

NO.	PARTS CODE	PRICE RANK Ex.	PRICE RANK Ja.	NEW MARK	PART RANK	DESCRIPTION	
1	QEARP0197FCZZ	AC	DJ	N	C	Tension roller earth electrode	ﾃﾝｼｮﾝﾛｰﾗｰｱｰｽ端子
2	XEBS730P10000	AC	DD		C	Screw(3×10)	ﾋﾞｽ
4	MSPRC3346FCZ2	AB	DJ	N	C	Belt tension spring	ﾍﾞﾙﾄﾃﾝｼｮﾝｽﾌﾟﾘﾝｸﾞ
6	MSPRT3389FCZZ	AB	DJ	N	C	1st transfer pressure spring	1 次転写加圧ｽﾌﾟﾘﾝｸﾞ
8	MLNKP0033FCZZ	AE	DJ	N	C	1st transfer link CL R	1 次転写ﾘﾝｸ CL R
9	NSFTZ2907FCZ1	AP	EQ	N	C	Transfer roller shaft	転写ﾛｰﾗｰｼｬﾌﾄ
11	XRESP50-06000	AA	DD		C	E ring(E5)	E ﾘﾝｸﾞ
12	NSFTZ2908FCZ1	AS	EZ	N	C	Transfer follower roller shaft	転写従動ﾛｰﾗｰ軸
15	XEPS730P08XS0	AB	DD	N	C	Screw(3×8XS)	ﾋﾞｽ
17	MLNKP0032FCZZ	AE	DJ	N	C	1st transfer link CL F	1 次転写ﾘﾝｸ CL F
18	XRESP70-08000	AA	DD		C	E ring(E7)	E ﾘﾝｸﾞ
19	NBRGP0744FCZZ	AB	DJ	N	C	Insulate bearing	絶縁軸受
20	LX-BZ1012FCZZ	AB	DD	N	C	Link fixing screw	ﾘﾝｸ取付ﾋﾞｽ
21	LX-BZ1004FCZZ	AC	DD	N	C	Joint plate step screw	ｼﾞｮｲﾝﾄﾌﾟﾚｰﾄ段ﾋﾞｽ
22	MARMP0337FCZZ	AC	DJ	N	C	Separate detect arm	離接検知ｱｰﾑ
23	LPLTM6566FCZZ	AD	DJ	N	C	Frame joint plate	ﾌﾚｰﾑｼﾞｮｲﾝﾄﾌﾟﾚｰﾄ
24	LFRM-1150FCZZ	AY	FQ	N	C	1st transfer frame CL	1 次転写ﾌﾚｰﾑ CL
25	PCLR-0512FCZ1	AQ	EQ	N	A	1st transfer collar	1 次転写導電ｶﾗｰ
26	NRŌLR1551FCZZ	BQ	LP	N	A	Y support roller	Y 補助ﾛｰﾗｰ
27	NRŌLM1553FCZZ	BR	LP	N	A	1st transfer roller	1 次転写ﾛｰﾗｰ
28	MSPRD3368FCZZ	AE	DS	N	C	1st transfer print spring Y	1 次転写印加ｽﾌﾟﾘﾝｸﾞ Y
29	MSPRD3369FCZZ	AE	DJ	N	C	1st transfer print spring M	1 次転写印加ｽﾌﾟﾘﾝｸﾞ M
30	MSPRD3370FCZZ	AE	DJ	N	C	1st transfer print spring C	1 次転写印加ｽﾌﾟﾘﾝｸﾞ C
32	MSPRD3576FCZZ	AB	DJ	N	C	1st transfer print spring YA	1 次転写印加ｽﾌﾟﾘﾝｸﾞ -YA
33	MSPRD3575FCZZ	AB	DJ	N	C	1st transfer print spring CMA	1 次転写印加 ｽﾌﾟﾘﾝｸﾞ -CMA
34	LX-WZ0421FCZZ	AA	DD		C	Poly slider(φ8-12)	ﾎﾟﾘｽﾗｲﾀﾞｰ
	(Unit)						
901	DUNT-7445DS12	BX	TF	N	E	1st transfer unit (Include Block[25],[26],[27])	1 次転写ﾕﾆｯﾄ

28 1 次転写ﾕﾆｯﾄ 3(1st transfer unit 3)

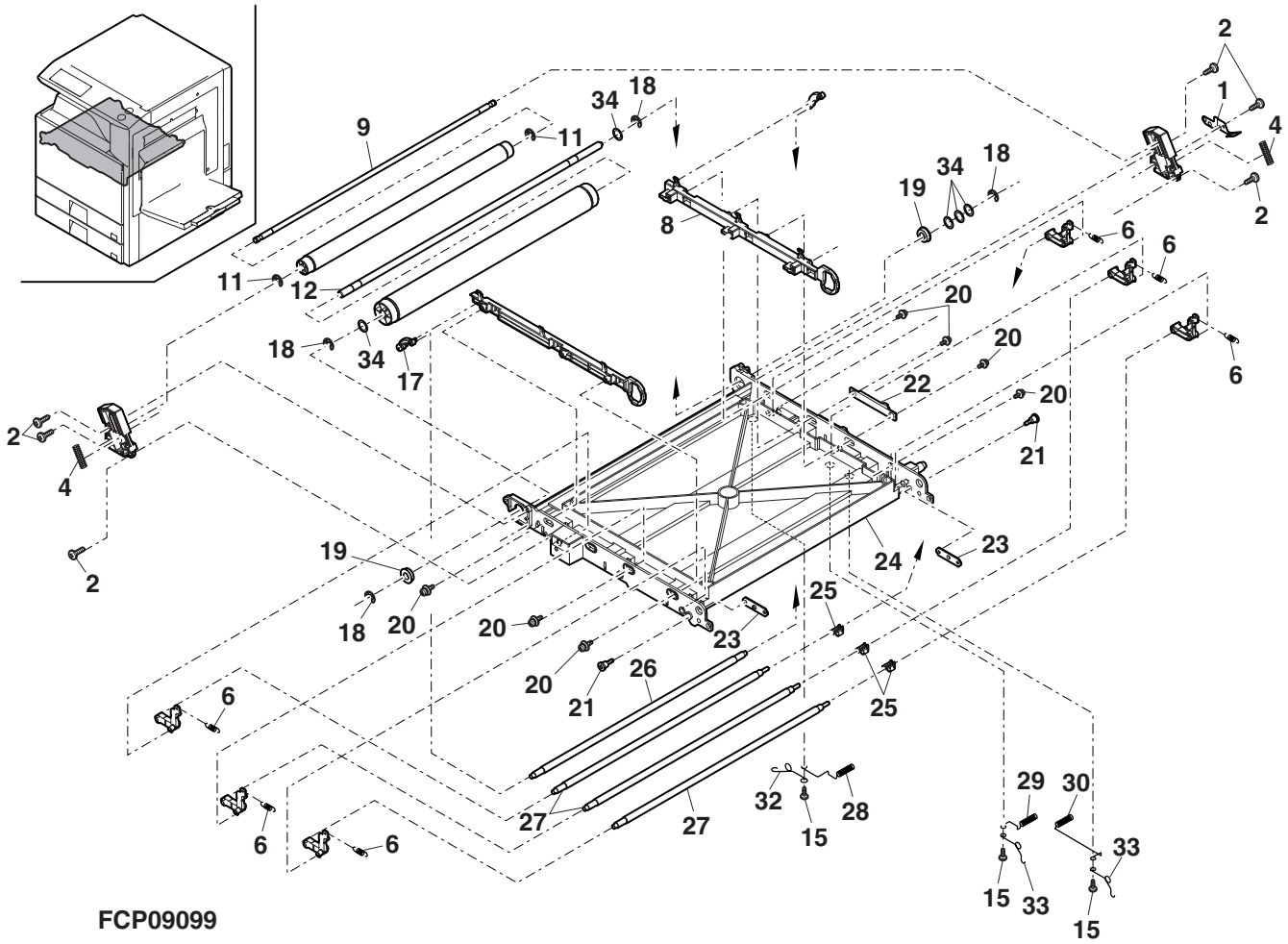

29 2 次転写ﾕﾆｯﾄ 1(2nd transfer unit 1)

NO.	PARTS CODE	PRICE RANK Ex.	PRICE RANK Ja.	NEW MARK	PART RANK	DESCRIPTION	
3	XEBS740P08000	AA	DD		C	Screw(4×8)	ﾋﾞｽ
5	PCLR-0522FCZZ	AC	DJ	N	C	2nd belt drive roller coupling	2 次ﾍﾞﾙﾄ駆動ﾛｰﾗｰｶｯﾌﾟﾘﾝｸﾞ
6	NGERH1686FCZZ	AR	EQ	N	A	2nd drive idle gear	2 次駆動ｱｲﾄﾞﾙｷﾞｱ
7	XRESP30-06000	AA	DD		C	E ring(E3)	E ﾘﾝｸﾞ
8	NBLTH0463FCZZ	AD	DJ	N	B	2nd drive pulley belt	2 次駆動ﾌﾟｰﾘｰﾍﾞﾙﾄ
9	NPLYZ0459FCZZ	AR	EQ	N	C	2nd drive pulley	2 次駆動ﾌﾟｰﾘｰ
10	LPiNS0155FCZZ	AA	DD		C	Pin(3-10)	平行ﾋﾟﾝ
14	LX-BZ0980FCPZ	AA	DD	N	C	Blue screw(3×12)	青ﾋﾞｽ
15	LFRM-1196FCZ1	AP	EQ	N	C	2nd belt reinforce frame	2 次ﾍﾞﾙﾄ補強ﾌﾚｰﾑ
16	QEARP0208FCZZ	AD	DJ	N	C	2nd earth terminal	2 次ｱｰｽ端子 R
17	XEBS730P08000	AC	DD		C	Screw(3×8)	ﾋﾞｽ
18	DUNTK0233QSPZ	AH	DX		E	Resistor unit transfer	抵抗ﾕﾆｯﾄ転写
20	PGiDH2144FCZZ	AL	EB	N	C	Transfer front PG GID	転写前 PG GID
21	LX-WZ2011SCZZ	AA	DD		C	Poly slider	ﾎﾟﾘｽﾗｲﾀﾞｰ
	(Unit)						
901	DUNT-7467DS11	BR	MJ	N	E	2nd transfer unit (Include Block [30])	2 次転写ﾕﾆｯﾄ

29 2 次転写ﾕﾆｯﾄ 1(2nd transfer unit 1)

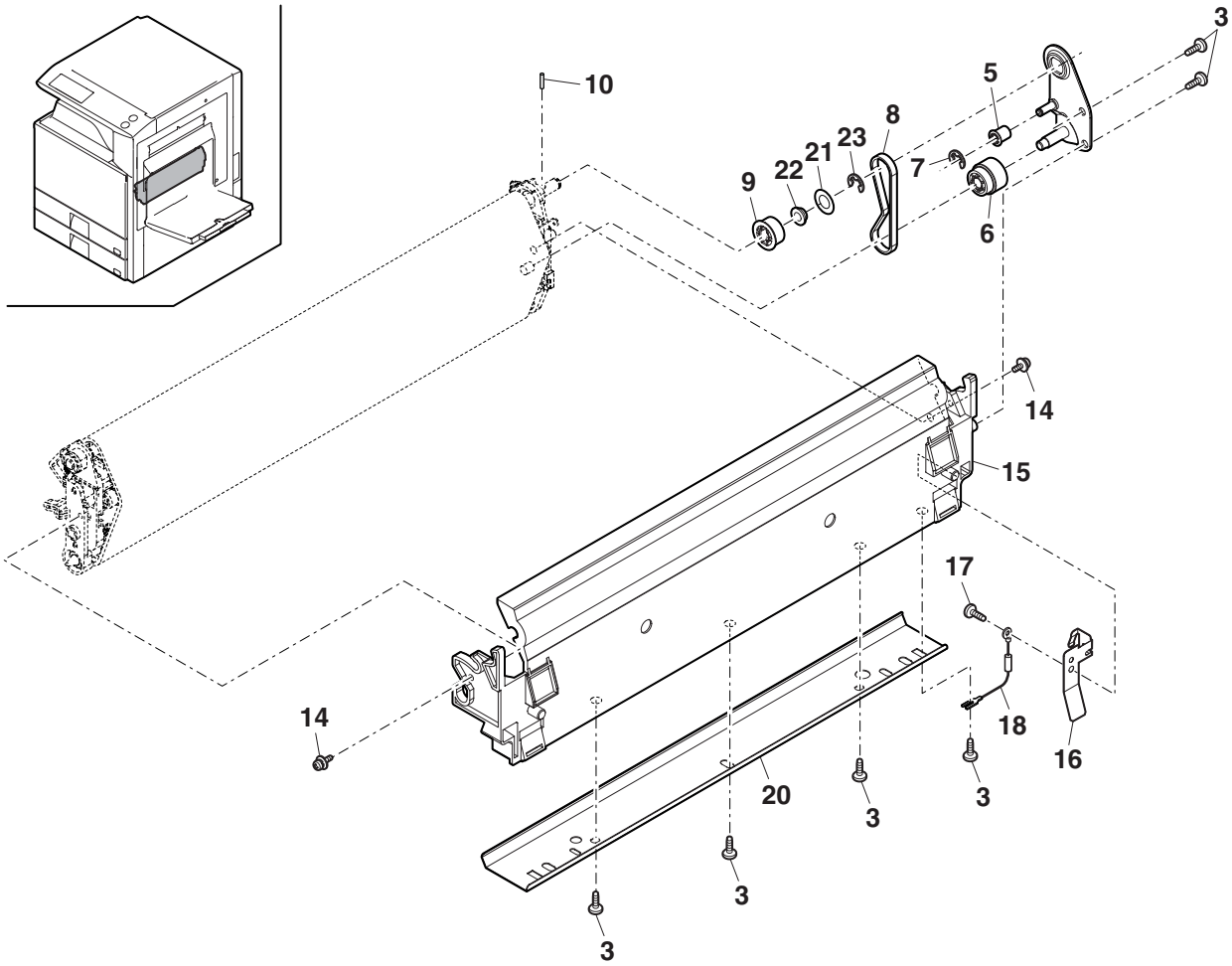

FCP09100

30 2 次転写ﾕﾆｯﾄ 2(2nd transfer unit 2)

NO.	PARTS CODE	PRICE RANK Ex.	PRICE RANK Ja.	NEW MARK	PART RANK	DESCRIPTION	
3	XEBS730P08000	AC	DD		C	Screw(3×8)	ﾋﾞｽ
4	MSPRD3450FCZZ	AE	DJ	N	C	2nd belt transfer spring R	2 次ﾍﾞﾙﾄ転写ｽﾌﾟﾘﾝｸﾞ R
5	NBRGP0760FCZZ	AQ	EQ	N	C	2nd transfer bearing RD	2 次転写軸受 RD
6	NROLR1559FCZZ	AV	FG	N	A	2nd transfer roller D	2 次転写ﾛｰﾗｰ D
8	NBRGP0674FCZZ	AE	DJ		C	Belt idle bearing	ﾍﾞﾙﾄｱｲﾄﾞﾙ軸受
9	QEARP0206FCZZ	AC	DJ	N	C	2nd earth electrode	2 次ｱｰｽ電極 A
10	LFRM-1194FCZZ	AL	EB	N	C	2nd belt transfer frame	2 次ﾍﾞﾙﾄ転写ﾌﾚｰﾑ
12	LPLTM5714FCZZ	AB	DJ		C	M3 plate	M3 ﾌﾟﾚｰﾄ
13	MSPRC3451FCZZ	AB	DJ	N	C	2nd belt tension spring	2 次ﾍﾞﾙﾄﾃﾝｼｮﾝｽﾌﾟﾘﾝｸﾞ
14	NBRGP0758FCZZ	AQ	EQ	N	C	2nd belt tension bearing	2 次ﾍﾞﾙﾄﾃﾝｼｮﾝ軸受
15	NROLR1557FCZZ	AR	EQ	N	A	2nd belt tension roller	2 次ﾍﾞﾙﾄﾃﾝｼｮﾝﾛｰﾗｰ
16	NROLR1558FCZZ	AR	EQ	N	A	2nd belt follower roller	2 次ﾍﾞﾙﾄ従動ﾛｰﾗｰ
17	NBRGP0759FCZZ	AB	DJ	N	C	2nd transfer bearing FD	2 次転写軸受 FD
18	MSPRC3449FCZZ	AB	DJ	N	C	2nd belt transfer spring F	2 次ﾍﾞﾙﾄ転写ｽﾌﾟﾘﾝｸﾞ F
19	XRESP50-06000	AA	DD		C	E ring(E5)	E ﾘﾝｸﾞ
20	LFRM-1195FCZZ	AC	DJ	N	C	2nd belt side frame	2 次ﾍﾞﾙﾄｻｲﾄﾞﾌﾚｰﾑ
21	NBLTH0461FCZZ	BF	GN	N	A	2nd transfer belt	2 次転写ﾍﾞﾙﾄ
	(Unit)						
901	DUNT-7467DS11	BR	MJ	N	E	2nd transfer unit (Include Block [29])	2 次転写ﾕﾆｯﾄ

30 2 次転写ﾕﾆｯﾄ 2(2nd transfer unit 2)

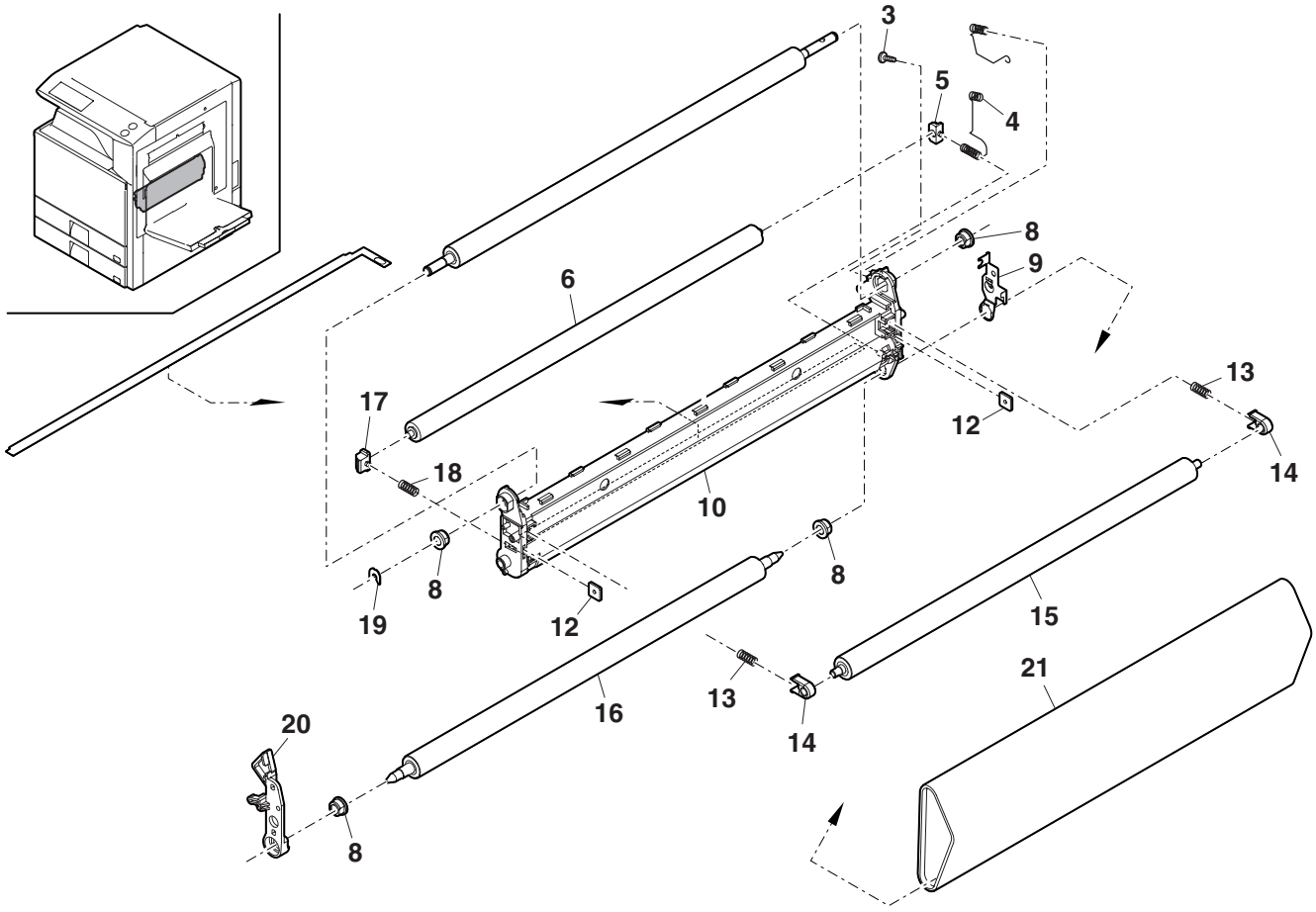

FCP09101

31 定着部 1(Fusing unit 1)

NO.	PARTS CODE	PRICE RANK Ex.	PRICE RANK Ja.	NEW MARK	PART RANK	DESCRIPTION	
1	XEPS840P08X00	AC	DD		C	Screw(4×8X)	ﾋﾞｽ
2	MLEVP0957FCZZ	AD	DJ	N	C	Fusing lock lever	定着ﾛｯｸﾚﾊﾞｰ
3	LX-BZ0046QSPZ	AA	DD		C	Screw(3×6 blue)	ﾋﾞｽ
4	PCOVP1798FCZZ	AX	FG	N	D	Fusing upper cover R	定着上ｶﾊﾞｰR
5	NGERH1634FCZZ	AR	EQ	N	C	Separate gear(18T)	分離ｷﾞﾔ
6	JKNBZ0148FCZZ	AC	DJ	N	C	Knob(20T)	ﾉﾌﾞ
7	LX-BZ0067QSPZ	AB	DD	N	C	Screw(4×8 blue)	ﾋﾞｽ
9	LX-BZ0736FCPZ	AC	DD	N	C	DV drive step screw	DV 駆動段ﾋﾞｽ
10	CPLTM6493FC01	AF	DS	N	C	Gear drive plate	ｷﾞﾔ駆動板
11	XEBS730P08000	AC	DD		C	Screw(3×8)	ﾋﾞｽ
15	LX-BZ0882FCPZ	AD	DD	N	C	Positioning screw(φ6)	位置決めﾋﾞｽ
	(Unit)						
901	DUNTW7441DSZZ	CA	TR	N	E	Fusing unit (100V series)(Include Block [32],[33])	定着ﾕﾆｯﾄ
	DUNTW7441DS11	CA	TR	N	E	Fusing unit (120V series)(Include Block [32],[33])	定着ﾕﾆｯﾄ

32 定着部 2(Fusing unit 2)

NO.	PARTS CODE	PRICE RANK Ex.	PRICE RANK Ja.	NEW MARK	PART RANK	DESCRIPTION	
1	DHAi-3701FCZ2	AW	FG	N	C	Fusing upper harness (100V white connector)	定着上ﾊｰﾈｽ
	DHAi-3779FCZ1	AW	FG	N	C	Fusing upper harness (120V red connector)	定着上ﾊｰﾈｽ
	DHAi-3780FCZ1	AW	FG	N	C	Fusing upper harness (230V blue connector)	定着上ﾊｰﾈｽ
2	LX-BZ0905FCPZ	AB	DD	N	C	Screw(3×12)	ﾋﾞｽ
3	XHBS730P04000	AA	DD		C	Screw(3×4)	ﾋﾞｽ
4	XWHS730-05080	AA	DD		C	Washer(φ3-8t0.5)	ﾜｯｼｬｰ
5	DHAi-3703FCZ1	AD	DJ	N	C	TS-HL SUB relay harness	TS-HL SUB 間ﾊｰﾈｽ
6	RTHM-0028FCZZ	AL	EB	N	B	Thermostat upper	ｻｰﾓｽﾀｯﾄ上
8	DHAi-3702FCZ2	AC	DJ	N	C	TS-HL MAIN relay harness	TS-HL MAIN 間ﾊｰﾈｽ
9	LX-BZ0046QSPZ	AA	DD		C	Screw(3×6 blue)	ﾋﾞｽ
10	PGiDM2107FCZ1	BD	GN	N	D	Fusing rear upper PG	定着後上 PG
12	MSPRT3457FCZZ	AA	DJ	N	C	Separate pawl upper spring	剥離爪上ｽﾌﾟﾘﾝｸﾞ
14	LX-BZ1030FCZZ	AB	DD	N	C	Thermistor screw	ｻｰﾐｽﾀｰﾋﾞｽ
15	XHBS730P06000	AC	DD		C	Screw(3×6)	ﾋﾞｽ
16	MSPRC3456FCZZ	AB	DJ	N	C	Earth spring	ｱｰｽｽﾌﾟﾘﾝｸﾞ
17	PCOVP1799FCZ1	BG	GT	N	D	Fusing paper feed cover	定着入紙ｶﾊﾞｰ
18	RDTCT0169FCZ2	AP	EQ	N	B	Thermistor upper	ｻｰﾐｽﾀｰ上
19	QSLP-0207FCZZ	AC	DJ	N	B	Lamp electrode B	ﾗﾝﾌﾟ電極 B
20	LX-BZ3006SCPS	AA	DD	N	C	Cup screw(3×6)	ｶｯﾌﾟｽｸﾘｭｰ
21	QSLP-0206FCZZ	AD	DJ	N	B	Lamp electrode A	ﾗﾝﾌﾟ電極 A
22	QEARP0191FCZZ	AC	DJ	N	C	Earth plate	ｱｰｽ板
23	LFRM-1173FCZ1	AN	EG	N	C	Fusing upper frame	定着上ﾌﾚｰﾑ
28	MSPRC3059FCZZ	AC	DJ		C	HR fixing spring	HR 固定ｽﾌﾟﾘﾝｸﾞ
29	LSTPF0172FCZ1	AA	DJ		C	Roller stopper	ﾛｰﾗｰｽﾄｯﾊﾟｰ
30	NGERH1608FCZZ	AM	EG	N	A	Fusing gear(60T)	定着ｷﾞﾔ
31	NBRGY0761FCZZ	AQ	EQ	N	A	Upper HR bearing	上 HR ﾍﾞｱﾘﾝｸﾞ
32	NROLi1534FCZ1	BG	GT	N	A	Upper heat roller P	上ﾋｰﾄﾛｰﾗｰ P
33	RLMPU0707FCPZ	AY	FQ	N	B	Upper heater lamp sub (100V white connector)	上ﾋｰﾀｰﾗﾝﾌﾟｻﾌﾞ
	RLMPU0708FCPZ	AY	FQ	N	B	Upper heater lamp sub (120V red connector)	上ﾋｰﾀｰﾗﾝﾌﾟｻﾌﾞ
34	RLMPU0704FCPZ	AY	FQ	N	B	Upper heater lamp main (100V white connector)	上ﾋｰﾀｰﾗﾝﾌﾟﾒｲﾝ
	RLMPU0705FCPZ	AY	FQ	N	B	Upper heater lamp main (120V red connector)	上ﾋｰﾀｰﾗﾝﾌﾟﾒｲﾝ
35	LHLDZ1664FCZZ	AC	DJ	N	C	Upper lamp holder F	上ﾗﾝﾌﾟﾎﾙﾀﾞｰF
36	XEBS730P08000	AC	DD		C	Screw(3×8)	ﾋﾞｽ
37	RDTCT0180FCZZ	AZ	FQ	N	B	Un-contacting thermistor	非接触ｻｰﾐｽﾀｰ
38	PCOVP2020FCZZ	AC	DJ	N	C	Thermistor cover	ｻｰﾐｽﾀｰｶﾊﾞｰ
39	PSHEP5481FCZZ	AU	FG	N	C	Fusing upper cover	定着上ｶﾊﾞｰ
40	LRTNP0015FCPZ	AD	DJ	N	C	Retainer(9pin)	ﾘﾃｰﾅ
501	CGiDM2107DS51	AZ	FX	N	E	Fusing rear upper PG (100V)	定着後上 PG
	CGiDM2107DS52	AU	EZ	N	E	Fusing rear upper PG (120V,230V)	定着後上 PG
	(Unit)						
901	DUNTW7441DSZZ	CA	TR	N	E	Fusing unit (100V series)(Include Block [31],[33])	定着ﾕﾆｯﾄ
	DUNTW7441DS11	CA	TR	N	E	Fusing unit (120V series)(Include Block [31],[33])	定着ﾕﾆｯﾄ

31 定着部 1(Fusing unit 1)

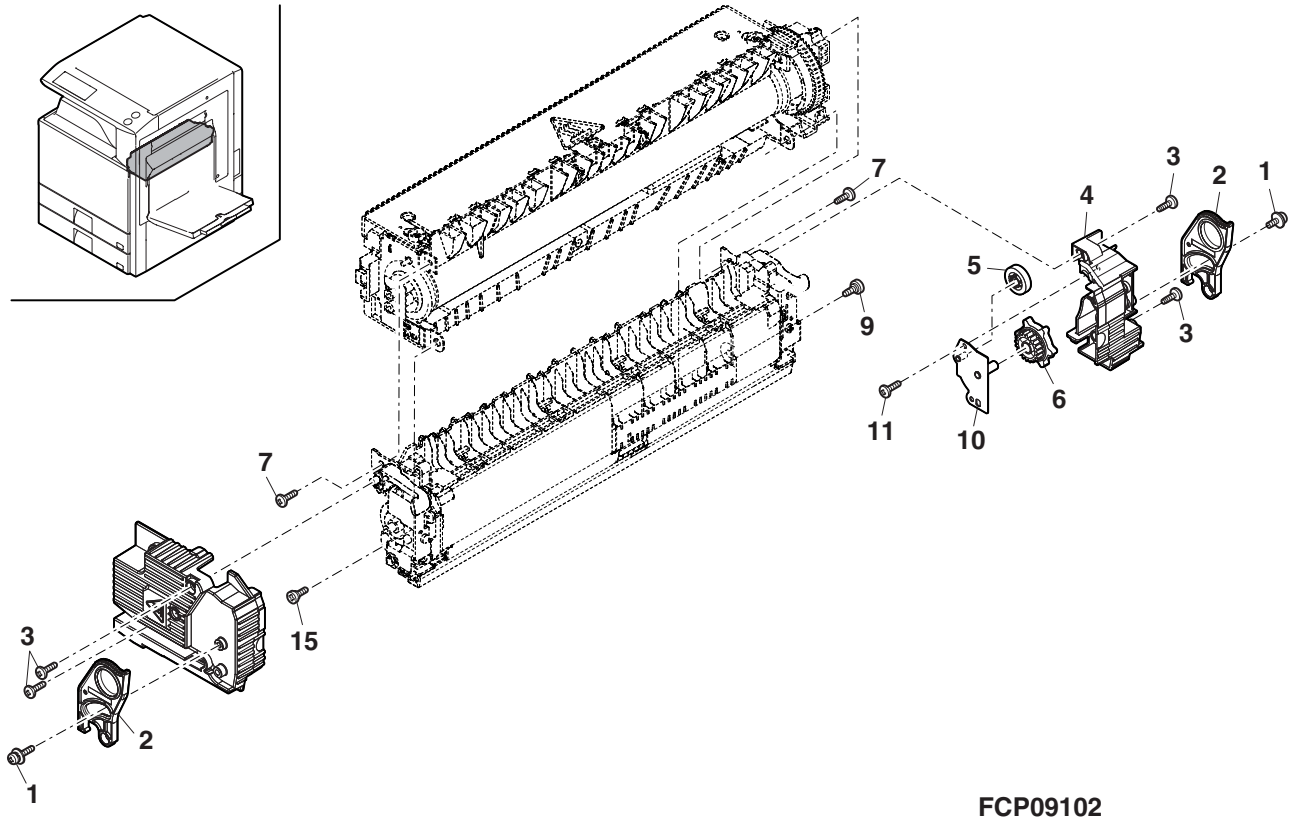

32 定着部 2(Fusing unit 2)

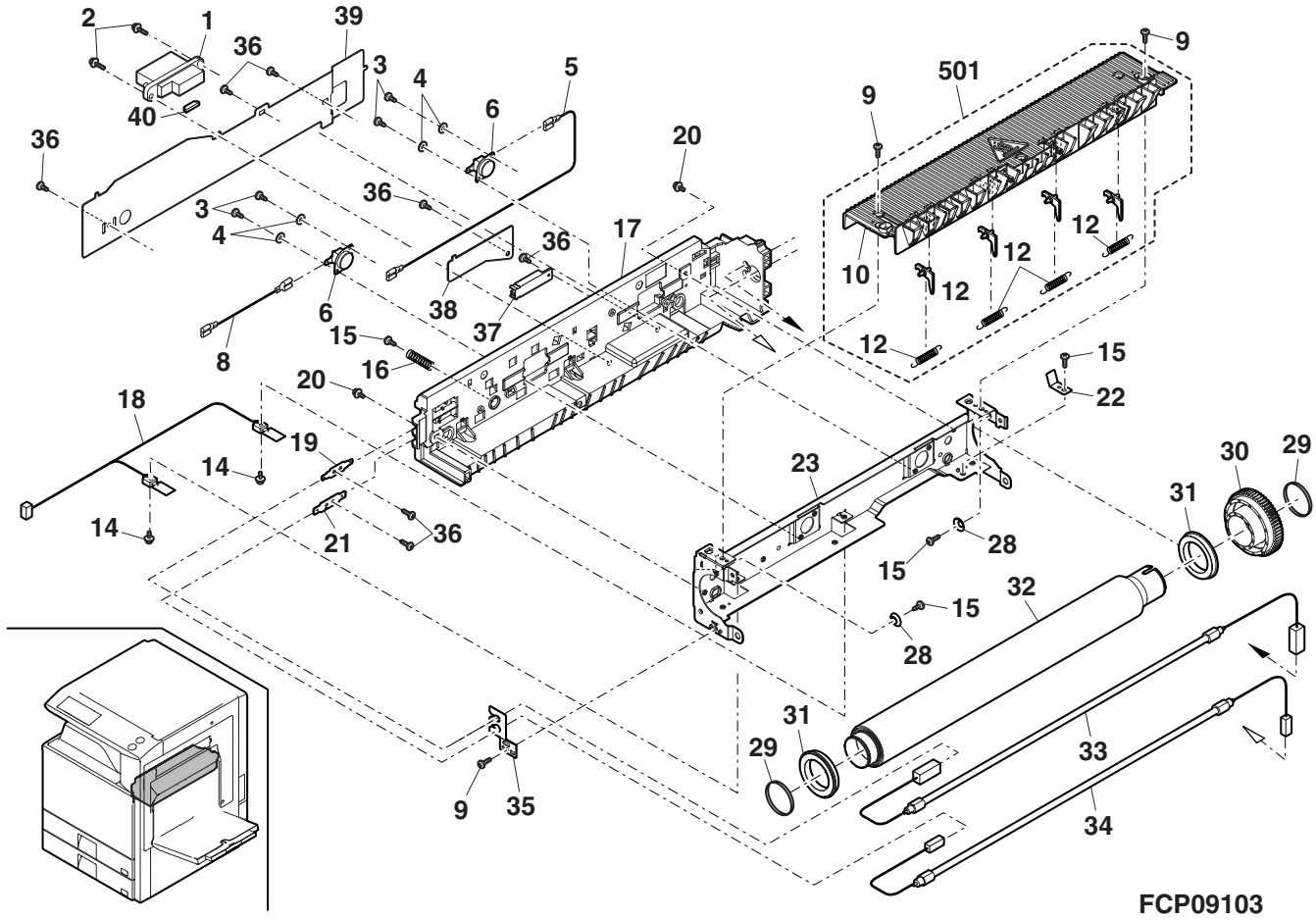

33 定着部 3(Fusing unit 3)

NO.	PARTS CODE	PRICE RANK Ex.	PRICE RANK Ja.	NEW MARK	PART RANK	DESCRIPTION	
1	LHLDZ1662FCZZ	AB	DJ	N	C	Lower lamp holder	下ﾗﾝﾌﾟﾎﾙﾀﾞｰ
2	LX-BZ0046QSPZ	AA	DD		C	Screw(3×6 blue)	ﾋﾞｽ
3	XRESP50-06000	AA	DD		C	E ring(E5)	E ﾘﾝｸﾞ
4	MLEVP0956FCZ1	AD	DJ	N	C	Release lever R	圧解ﾚﾊﾞｰR
5	MLEVF0969FCZZ	AC	DJ	N	C	Pressure lever R	加圧ﾚﾊﾞｰR
6	MSPRC3460FCZZ	AD	DJ	N	C	Pressure spring	加圧ｽﾌﾟﾘﾝｸﾞ
7	XRESP40-06000	AA	DD		C	E ring(E4)	E ﾘﾝｸﾞ
8	CFRM-1174FC01	AL	EB	N	C	Fusing lower frame R	定着下ﾌﾚｰﾑR
9	MSPRC3059FCZZ	AC	DJ		C	HR fixing spring	HR 固定ｽﾌﾟﾘﾝｸﾞ
10	XHBS730P06000	AC	DD		C	Screw(3×6)	ﾋﾞｽ
11	DHAi-3704FCZZ	AD	DJ	N	C	TS-HL LOW relay harness (100V white connector)	TS-HL LOW 間ﾊｰﾈｽ
	DHAi-3781FCZZ	AD	DJ	N	C	TS-HL LOW relay harness (120V red connector)	TS-HL LOW 間ﾊｰﾈｽ
	DHAi-3782FCZZ	AD	DJ	N	C	TS-HL LOW relay harness (230V blue connector)	TS-HL LOW 間ﾊｰﾈｽ
12	RLMPU0710FCPZ	AY	FQ	N	B	Lower heater lamp (100V)	下ﾋｰﾀｰﾗﾝﾌﾟ
	RLMPU0711FCPZ	AY	FQ	N	B	Lower heater lamp (120V)	下ﾋｰﾀｰﾗﾝﾌﾟ
13	MSPRD3058FCZZ	AC	DJ		C	Roller stopper 20	ﾛｰﾗｰｽﾄｯﾊﾟｰ20
14	NBRGY0762FCZZ	AN	EQ	N	A	Lower HR bearing	下 HR ﾍﾞｱﾘﾝｸﾞ
15	NROLi1533FCZZ	BF	GN	N	A	Lower heat roller	下ﾋｰﾄﾛｰﾗｰ
16	LSTYM0352FCZ1	AK	DX	N	C	Fusing lower stay	定着下ｽﾃｲ
17	RTHM-0021FCZZ	AN	EG		B	Thermostat lower	ｻｰﾓｽﾀｯﾄ下
18	XWHS730-05080	AA	DD		C	Washer(ϕ3-8t0.5)	ﾜｯｼｬｰ
19	XHBS730P04000	AA	DD		C	Screw(3×4)	ﾋﾞｽ
20	RDTCT0170FCZ1	AP	EQ	N	A	Thermistor lower	ｻｰﾐｽﾀｰ下
21	PGiDH2143FCZ1	AH	DX	N	C	Fusing paper feed PG	定着入紙 PG
22	LX-BZ1031FCZZ	AB	DD	N	C	Paper feed PG screw	入紙 PG ﾋﾞｽ
23	CFRM-1175FC01	AL	EB	N	C	Fusing lower frame F	定着下ﾌﾚｰﾑF
24	MLEVP0955FCZ1	AD	DJ	N	C	Release lever F	圧解ﾚﾊﾞｰF
25	MLEVF0968FCZZ	AC	DJ	N	C	Pressure lever F	加圧ﾚﾊﾞｰF
26	LHLDZ1619FCZ1	AH	DX	N	C	Fusing lower harness holder	定着下ﾊｰﾈｽﾎﾙﾀﾞｰ
27	LX-BZ3006SCPS	AA	DD	N	C	Cup screw(3×6)	ｶｯﾌﾟｽｸﾘｭｰ
32	PGiDM2106FCZ1	BD	GN	N	C	Fusing rear lower PG	定着後下 PG
35	PCOVP1801FCZ1	AW	FG	N	D	Fusing lower cover	定着下ｶﾊﾞｰ
36	LX-BZ1030FCZZ	AB	DD	N	C	Thermistor screw	ｻｰﾐｽﾀｰﾋﾞｽ
37	TLABH0289QSZZ	AA	DJ		D	Fusing green label	定着ｸﾞﾘｰﾝﾗﾍﾞﾙ
38	TLABH0308QSZZ	AF	DS		D	High temperature caution label	高温注意ﾗﾍﾞﾙ
39	LHLDW0450FCZZ	AD	DJ		C	Clamp(KCA-34)	ｸﾗﾝﾌﾟ
40	PCOVP2004FCZ1	AP	EQ	N	C	Paper feed PG cover	入紙 PG ｶﾊﾞｰ
41	LX-BZ0026GCZ1	AC	DD		C	Under pressure lever fixing screw	下加圧ﾚﾊﾞｰ取付ﾋﾞｽ
42	PBRSS0240FCZZ	AG	DX	N	B	Discharger brush	除電ﾌﾞﾗｼ
501	CGiDM2106DS51	AV	FG	N	E	Fusing rear lower PG unit	定着後下 PG ﾕﾆｯﾄ
	(Unit)						
901	DUNTW7441DSZZ	CA	TR	N	E	Fusing unit (100V series)(Include Block [31],[32])	定着ﾕﾆｯﾄ
	DUNTW7441DS11	CA	TR	N	E	Fusing unit (120V series)(Include Block [31],[32])	定着ﾕﾆｯﾄ

33 定着部 3(Fusing unit 3)

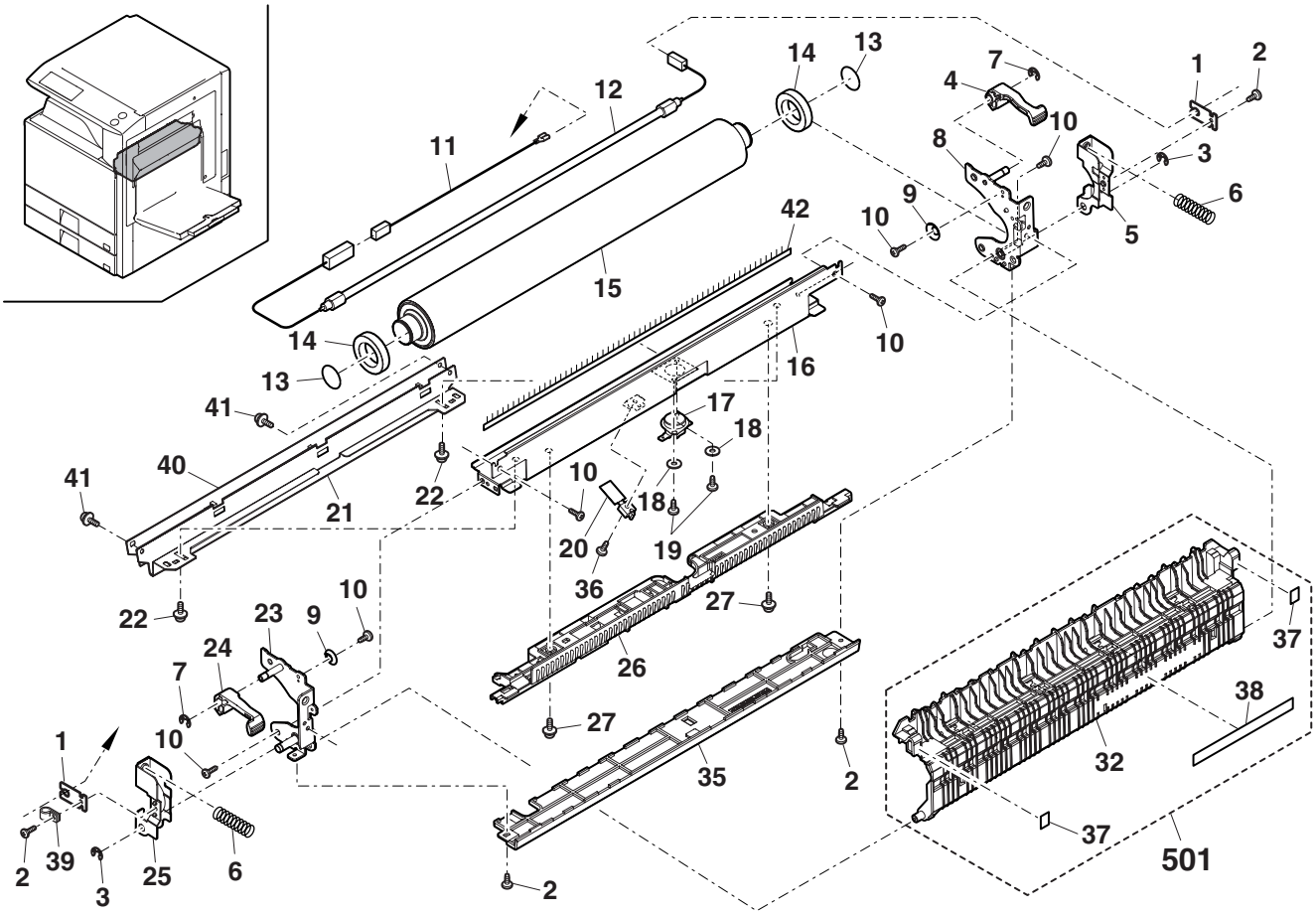

FCP09104

34 右ﾄﾞｱﾕﾆｯﾄ 1(Right door unit 1)

NO.	PARTS CODE	PRICE RANK Ex.	PRICE RANK Ja.	NEW MARK	PART RANK	DESCRIPTION	
1	PCOVP1823FCZZ	AN	EQ	N	C	ADU inner cover R	ADU ｲﾝﾅｰｶﾊﾞｰ R
2	XEBS740P10000	AA	DD		C	Screw(4×10)	ﾋﾞｽ
3	XHBS740P08000	AA	DD		C	Screw(4×8)	ﾋﾞｽ
4	XHBS740P10000	AA	DD		C	Screw(4×10)	ﾋﾞｽ
5	CPWBN1671FC31	AY	FQ	N	E	RD-I/F PWB	RD-I/F 基板
6	XHBS730P06000	AC	DD		C	Screw(3×6)	ﾋﾞｽ
7	DHAi-3729FCZ3	BA	FX	N	C	Right door harness P	右ﾄﾞｱﾊｰﾈｽ P
8	LDAiU0696FCZZ	AF	DS	N	D	Drawer fixing bese	ﾄﾞﾛｱ取付台
9	LANGT1434FCZZ	AL	EB	N	C	Rail fixing angle R lower	ﾚｰﾙ取付ｱﾝｸﾞﾙ R 下
10	LX-BZ0862FCPZ	AC	DD	N	C	Step screw	段ﾋﾞｽ
11	CPLTM6507FC01	AL	EB	N	C	MF drive joint plate	MF 駆動連結板
12	NBRGM0096FCZ1	AC	DJ		C	Bearing	軸受
13	XRESP40-06000	AA	DD		C	E ring(E4)	E ﾘﾝｸﾞ
14	NSFTZ2950FCZZ	AN	EQ	N	C	MF clutch shaft	MF ｸﾗｯﾁ軸
15	PCLC-0342FCZZ	BA	FX	N	B	Paper feed clutch(2.5K)	給紙ｸﾗｯﾁ
16	NGERH1679FCZZ	AD	DJ	N	C	Joint gear(21T)	連結ｷﾞｬ
17	MSPRT3434FCZZ	AB	DJ	N	C	MF drive arm spring	MF 駆動ｱｰﾑｽﾌﾟﾘﾝｸﾞ
18	MARMP0344FCZZ	AC	DJ	N	C	MF drive arm	MF 駆動ｱｰﾑ
19	NGERH1629FCZZ	AC	DJ	N	C	Paper feed gear(24T)	給紙ｷﾞｬ
20	NSFTZ2948FCZZ	AF	DS	N	C	Movable joint shaft	可動連結軸
21	NGERH1617FCZZ	AC	DJ	N	C	ADU joint gear(28T)	ADU 連結ｷﾞｬ
22	LFRM-1192FCZZ	AD	DJ	N	C	Drive joint frame	駆動連結ﾌﾚｰﾑ
23	XHBS730P08000	AB	DD		C	Screw(3×8)	ﾋﾞｽ
24	MSPRT3433FCZ1	AB	DJ	N	C	MF joint gear spring	MF 連結ｷﾞｬｽﾌﾟﾘﾝｸﾞ
25	XRESP50-06000	AA	DD		C	E ring(E5)	E ﾘﾝｸﾞ
26	GCAB-1087FCZZ	AT	EZ	N	D	ADU cabinet R	ADU ｷｬﾋﾞ R
27	XEPS730P08X00	AA	DD		C	Screw(3×8X)	ﾋﾞｽ
28	MLOKZ0012FCZZ	AC	DJ	N	C	ADU open/close door lock	ADU 開閉ﾄﾞｱﾛｯｸ
29	MSPRC3413FCZZ	AB	DJ	N	C	Open/close lock spring	開閉ﾛｯｸｽﾌﾟﾘﾝｸﾞ
30	GDOR-0041FCZZ	AX	FG	N	D	ADU open/close door	ADU 開閉ﾄﾞｱ
31	GCAB-1086FCZZ	AP	EQ	N	D	ADU cabinet F	ADU ｷｬﾋﾞ F
32	LPLTP6480FCZZ	AB	DJ	N	C	2nd transfer holder pressure plate	2 次転写ﾎﾙﾀﾞｰ加圧板
33	MSPRC3469FCZZ	AB	DJ	N	C	2nd belt holder spring	2 次ﾍﾞﾙﾄﾎﾙﾀﾞｰｽﾌﾟﾘﾝｸﾞ
34	LHLDZ1684FCZZ	AC	DJ	N	C	2nd belt holder R	2 次ﾍﾞﾙﾄﾎﾙﾀﾞｰ R
35	LPiNS0133FCZZ	AA	DD		C	Pin(2-10)	平行ﾋﾟﾝ
36	XBPS730P08KS0	AB	DD		C	Screw(3×8KS)	ﾋﾞｽ
37	PTME-0305FCZZ	AC	DJ	N	C	Right door lock pawl	右ﾄﾞｱﾛｯｸ爪
38	MSPRD3426FCZZ	AD	DJ	N	C	Right door lock spring	右ﾄﾞｱﾛｯｸｽﾌﾟﾘﾝｸﾞ
39	LHLDZ1469FCZZ	AE	DJ		C	Upper transport fulcrum holder	上搬送支点ﾎﾙﾀﾞｰ
40	NSFTZ2953FCZZ	AS	EQ	N	C	Right door lock shaft	右ﾄﾞｱﾛｯｸ軸
41	XEBS740P08000	AA	DD		C	Screw(4×8)	ﾋﾞｽ
42	MSPRC3452FCZZ	AC	DJ	N	C	2nd belt pressure spring	2 次ﾍﾞﾙﾄ圧接ｽﾌﾟﾘﾝｸﾞ
43	MSPRC3468FCZZ	AC	DJ	N	C	2nd belt earth spring	2 次ﾍﾞﾙﾄｱｰｽｽﾌﾟﾘﾝｸﾞ
44	LDAiU0704FCZZ	AC	DJ	N	D	2nd belt support block	2 次ﾍﾞﾙﾄ支持ﾌﾞﾛｯｸ
46	LHLDZ1683FCZZ	AC	DJ	N	C	2nd belt holder F	2 次ﾍﾞﾙﾄﾎﾙﾀﾞｰ F
48	MLEVP0944FCZ1	AE	DJ	N	C	Right door release lever	右ﾄﾞｱ解除ﾚﾊﾞｰ
49	LX-BZ0736FCPZ	AC	DD	N	C	DV drive step screw	DV 駆動段ﾋﾞｽ
50	PCOVP1941FCZZ	AD	DJ	N	C	ADU connector cover	ADU ｺﾈｸﾀｰｶﾊﾞｰ
	(Unit)						
901	CDAiU0700DS52	BY	TF	N	E	ADU unit (Include Block [35],[36])[MX-2300FG,MX-2700FG]	ADU ﾕﾆｯﾄ
	CDAiU0700DS53	BY	TF	N	E	ADU unit (Include Block [35],[36])[MX-2300G/N,MX-2700G/N]	ADU ﾕﾆｯﾄ

34 右ﾄﾞｱﾕﾆｯﾄ 1(Right door unit 1)

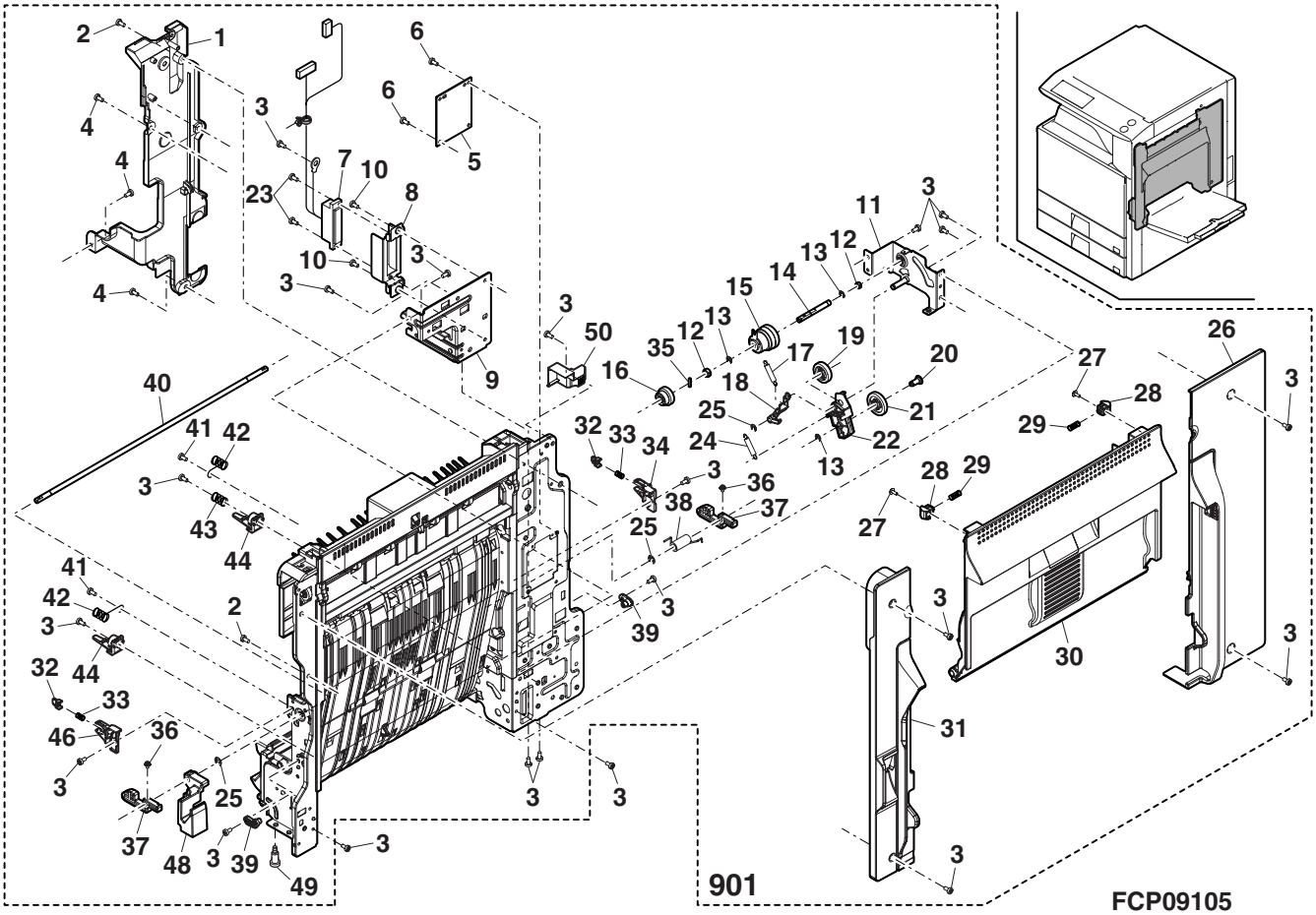

35 右ﾄﾞｱﾕﾆｯﾄ 2(Right door unit 2)

NO.	PARTS CODE	PRICE RANK Ex.	PRICE RANK Ja.	NEW MARK	PART RANK	DESCRIPTION	
1	NBRGC0249FCZ1	AD	DJ		C	Bearing	軸受
2	XRESP40-06000	AA	DD		C	E ring(E4)	E ﾘﾝｸﾞ
3	MSPRD3429FCZZ	AB	DJ	N	C	ADU reverse gate spring	ADU 反転ｹﾞｰﾄｽﾌﾟﾘﾝｸﾞ
4	PGiDM2148FCZZ	AQ	EQ	N	C	ADU reverse gate	ADU 反転ｹﾞｰﾄ
5	XHBS740P08000	AA	DD		C	Screw(4×8)	ﾋﾞｽ
6	LX-BZ0714FCPZ	AC	DD	N	C	Step screw	段ﾋﾞｽ
7	PGiDM2120FCZ1	AS	EZ	N	C	Reverse PG	反転 PG
8	MSPRC3414FCZZ	AC	DJ	N	C	Reverse PG spring	反転 PG ｽﾌﾟﾘﾝｸﾞ
9	NRŌLP1516FCZZ	AA	DJ	N	C	Transport follower roller	搬送従動ﾛｰﾗｰ
10	NSFTZ2954FCZZ	AG	DS	N	C	Follower roller shaft	従動ﾛｰﾗｰ軸
11	MSPRC3415FCZZ	AC	DJ	N	C	Follower pressure spring	従動加圧ｽﾌﾟﾘﾝｸﾞ
12	MSPRC3416FCZZ	AC	DJ	N	C	Reverse follower	反転従動ｱｰｽｽﾌﾟﾘﾝｸﾞ
13	LPLTP5827FCZZ	AF	DS		C	Multi sensor fixing plate	ﾏﾙﾁｾﾝｻｰ取付板
14	VHPGP1S73P+-1	AF	DS		B	Photo sensor(GP1S73P)	ﾌｫﾄｾﾝｻｰ
15	XEBS730P10000	AC	DD		C	Screw(3×10)	ﾋﾞｽ
16	DHAi-3734FCZ2	AE	DJ	N	C	ADU tranport 1 interfase harness	ADU 搬送 1 中継ﾊｰﾈｽ
17	MSPRD3427FCZZ	AC	DJ	N	C	ADU entrance actuator spring	ADU入口ｱｸﾁｪｰﾀｰｽﾌﾟﾘﾝｸﾞ
18	MLEVP0946FCZZ	AC	DJ	N	C	ADU entrance actuator	ADU 入口ｱｸﾁｪｰﾀｰ
19	GCAB-1088FCZZ	AP	EQ	N	D	Right delivery upper cabinet [MX-2300FG,MX-2700FG]	右排紙上ｷｬﾋﾞ
	GCAB-1154FCZZ	AQ	EQ	N	D	ADU right upper cabinet [MX-2300G/N,MX-2700G/N]	ADU 右上ｷｬﾋﾞ
20	DHAi-3731FCZZ	AG	DS	N	C	Right delivery UN harness [MX-2300FG,MX-2700FG]	右排紙 UN ﾊｰﾈｽ
21	MSPRC3411FCZZ	AA	DJ	N	C	Right delivery follower roller spring [MX-2300FG,MX-2700FG]	右排紙従動ﾛｰﾗｰｽﾌﾟﾘﾝｸﾞ
22	XHBS740P10000	AA	DD		C	Screw(4×10)	ﾋﾞｽ
24	MLEVP0941FCZZ	AC	DJ	N	C	Right delivery actuator [MX-2300FG,MX-2700FG]	右排紙ｱｸﾁｪｰﾀｰ
25	MSPRD3425FCZ1	AC	DJ		C	Right delivery actuator spring [MX-2300FG,MX-2700FG]	右排紙ｱｸﾁｪｰﾀｰｽﾌﾟﾘﾝｸﾞ
26	LHLDZ1666FCZZ	AC	DJ	N	C	Right full detect fulcrum [MX-2300FG,MX-2700FG]	右満杯検知支点
27	PCLR-0518FCZ1	AD	DJ	N	C	Shifter follower collar [MX-2300FG,MX-2700FG]	ｼﾌﾀｰ従動ｺﾛ
28	NSFTZ2951FCZZ	AN	EG	N	C	Right delivery follower roller shaft [MX-2300FG,MX-2700FG]	右排紙従動ﾛｰﾗｰ軸
29	PGiDH2141FCZZ	AK	DX	N	C	Right delivery PG upper	右排紙 PG 上
30	DHAi-3737FCZZ	AM	EG	N	C	Right delivery/reverse PG interfase harness	右排紙・反転 PG 中継ﾊｰﾈｽ
31	XEBS740P10000	AA	DD		C	Screw(4×10)	ﾋﾞｽ
32	PBRSS0192FCZZ	AH	DX		B	Discharger brush [MX-2300FG,MX-2700FG]	除電ﾌﾞﾗｼ
33	DHAi-3772FCZZ	AF	DS	N	C	ADU open/close detect harness	ADU 開閉検知ﾊｰﾈｽ
34	LPLTM6508FCZZ	AC	DJ	N	C	ADU open/close door sensor fixing plate	ADU 開閉ﾄﾞｱｾﾝｻｰ取付板
35	LSTYM0346FCZZ	AH	DX	N	C	ADU stay upper	ADU ｽﾃｲ上
36	PGiDM2149FCZZ	AR	EQ	N	C	ADU gate lower	ADU ｹﾞｰﾄ下
	(Unit)						
901	CDAiU0700DS52	BY	TF	N	E	ADU unit (Include Block [34],[36])[MX-2300FG,MX-2700FG]	ADU ﾕﾆｯﾄ
	CDAiU0700DS53	BY	TF	N	E	ADU unit (Include Block [34],[36])[MX-2300G/N,MX-2700G/N]	ADU ﾕﾆｯﾄ

35 右ﾄﾞｱﾕﾆｯﾄ 2(Right door unit 2)

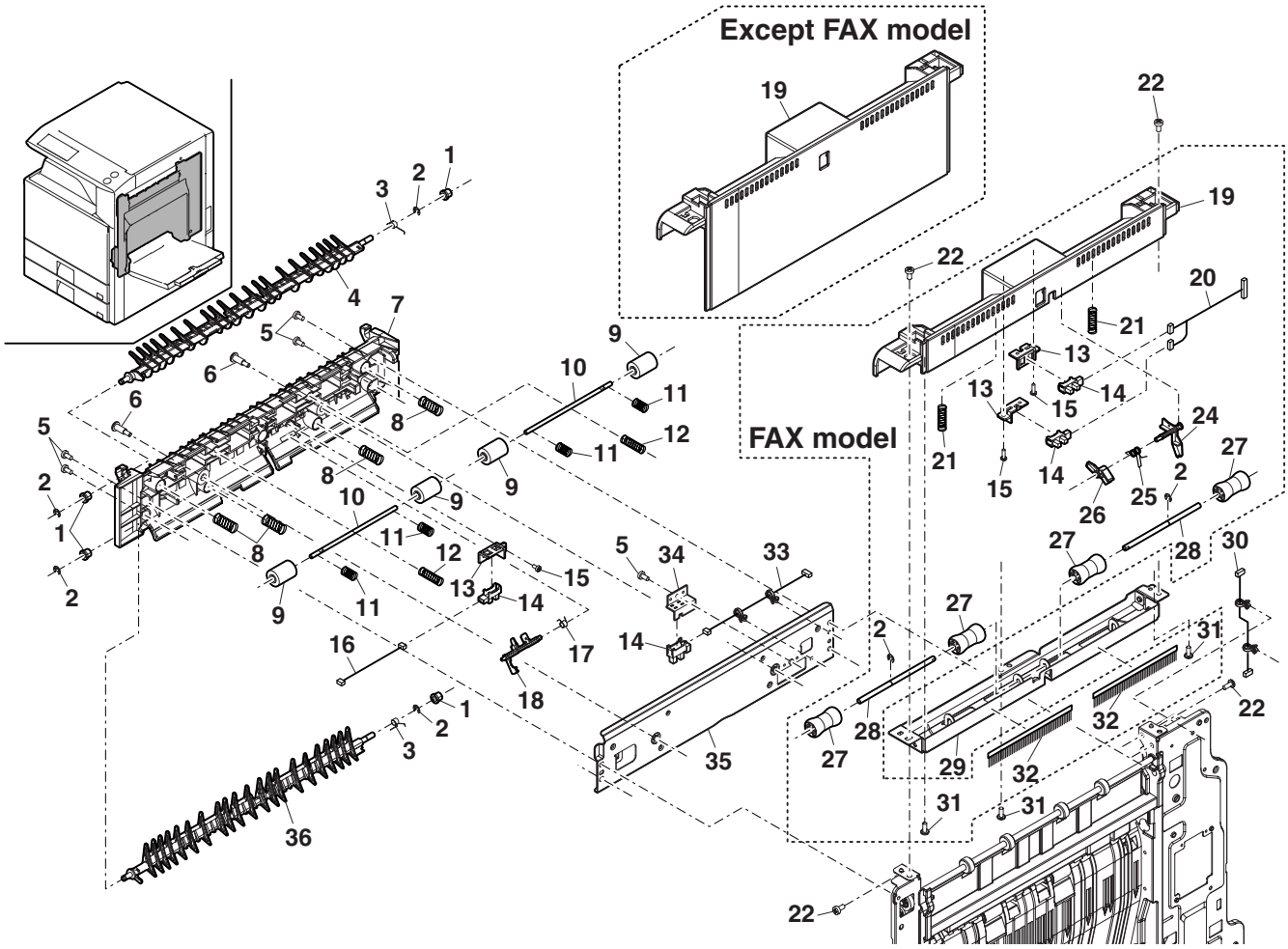

FCP09106

36 右ﾄﾞｱﾕﾆｯﾄ 3(Right door unit 3)

NO.	PARTS CODE	PRICE RANK Ex.	PRICE RANK Ja.	NEW MARK	PART RANK	DESCRIPTION	
1	NROLR1522FCZZ	AU	EZ	N	C	Right delivery roller	右排紙ﾛｰﾗｰ
2	NROLP1516FCZZ	AA	DJ	N	C	Transport follower roller	搬送従動ﾛｰﾗｰ
3	NSFTZ2949FCZZ	AG	DX	N	C	Right door follower shaft	右ﾄﾞｱ従動軸
4	MSPRC3410FCZZ	AC	DJ	N	C	ADU follower roller spring upper	ADU 従動ﾛｰﾗｰｽﾌﾟﾘﾝｸﾞ上
5	LX-BZ0884FCPZ	AB	DD	N	C	Pinion gear screw CGR	ﾋﾟﾆｵﾝｷﾞｬ用ﾋﾞｽ CGR
6	MSPRT3437FCZZ	AC	DJ	N	C	ADU folower roller spring lower	ADU 従動ﾛｰﾗｰｽﾌﾟﾘﾝｸﾞ下
8	NSFTZ2954FCZZ	AG	DS	N	C	Follower roller shaft	従動ﾛｰﾗｰ軸
9	MSPRC3417FCZZ	AC	DJ	N	C	Right door follower pressure spring	右ﾄﾞｱ従動加圧ｽﾌﾟﾘﾝｸﾞ
10	XRESP50-06000	AA	DD		C	E ring(E5)	E ﾘﾝｸﾞ
11	NBLTH0456FCZZ	AS	EQ	N	B	ADU transport belt	ADU 搬送ﾍﾞﾙﾄ
12	LX-BZ0714FCPZ	AC	DD	N	C	FIN fixing screw	FIN 固定ﾋﾞｽ
13	PCLR-0478FCZZ	AC	DJ		C	ADU brake collar	ADU ﾌﾞﾚｰｷｶﾗｰ
14	NGERH1634FCZZ	AR	EQ	N	C	Separate gear(18T)	分離ｷﾞｬ
15	NPLYZ0441FCZZ	AC	DJ	N	C	Pulley(22P)	ﾌﾟｰﾘｰ
16	LPiNS0133FCZZ	AA	DD		C	Pin(2-10)	平行ﾋﾟﾝ
17	NGERH1618FCZZ	AF	DS	N	C	ADU reduction gear(20/28)	ADU 減速ｷﾞｬ
18	CFRM-1158FC01	AU	EZ	N	C	ADU frame R	ADU ﾌﾚｰﾑ R
19	NBRGM0096FCZ1	AC	DJ		C	Bearing	軸受
20	XEBS740P10000	AA	DD		C	Screw(4×10)	ﾋﾞｽ
21	LHLDW1009ACZZ	AA	DD		C	Mini clamp	ﾐﾆｸﾗﾝﾌﾟ
22	JBTN-0280FCZZ	AC	DJ	N	C	Fusing PG lock button	定着 PG ﾛｯｸﾎﾞﾀﾝ
23	MSPRC3455FCZZ	AB	DJ	N	C	Fusing rear lower PG fixing spring	定着後下PG固定ｽﾌﾟﾘﾝｸﾞ
24	XEBS730P10000	AC	DD		C	Screw(3×10)	ﾋﾞｽ
25	VHPGP1S73P+-1	AF	DS		B	Photo sensor(GP1S73P)	ﾌｫﾄｾﾝｻｰ
26	LHLDZ1679FCZZ	AC	DJ	N	C	Sensor holder	ｾﾝｻｰﾎﾙﾀﾞｰ
27	MLEVP0951FCZZ	AC	DJ	N	C	PS front 2 sensor actuator	PS 前 2 ｾﾝｻｰｱｸﾁｪｰﾀｰ
28	MSPRD3420FCZZ	AB	DJ	N	C	PS front 2 actuator spring	PS 前 2 ｱｸﾁｪﾀｰｽﾌﾟﾘﾝｸﾞ
29	LDAiU0700FCZZ	AZ	FQ	N	D	ADU main body	ADU 本体
30	NROLR1520FCZ1	AV	FG	N	A	ADU paper feed roller	ADU 入紙ﾛｰﾗｰ
31	NROLR1521FCZZ	AU	EZ	N	A	ADU delivery roller	ADU 出紙ﾛｰﾗｰ
32	PGiDM2121FCZZ	AQ	EQ	N	C	Right door transport PG	右ﾄﾞｱ搬送 PG
33	PCLR-0501FCZZ	AB	DJ	N	C	Delivery guide collar	排紙ｶﾞｲﾄﾞｺﾛ
34	LPLTM6506FCZZ	AK	DX	N	C	Follower pressure plate	従動加圧板
35	PCOVP1892FCZZ	AK	DX	N	D	ADU waste toner cover	ADU 廃ﾄﾅｰｶﾊﾞｰ
36	NBLTH0457FCZZ	AQ	EQ	N	B	Right delivery belt	右排紙ﾍﾞﾙﾄ
37	CFRM-1157FC01	AR	EQ	N	C	ADU frame F	ADU ﾌﾚｰﾑ F
38	LANGT1432FCZZ	AG	DX	N	C	Rail fixing angle F	ﾚｰﾙ取付ｱﾝｸﾞﾙ F
39	XHBS740P08000	AA	DD		C	Screw(4×8)	ﾋﾞｽ
41	XHBS740P06000	AA	DD		C	Screw(4×6)	ﾋﾞｽ
	(Unit)						
901	CDAiU0700DS52	BY	TF	N	E	ADU unit (Include Block [34],[35])[MX-2300FG,MX-2700FG]	ADU ﾕﾆｯﾄ
	CDAiU0700DS53	BY	TF	N	E	ADU unit (Include Block [34],[35])[MX-2300G/N,MX-2700G/N]	ADU ﾕﾆｯﾄ

36 右ﾄﾞｱﾕﾆｯﾄ 3(Right door unit 3)

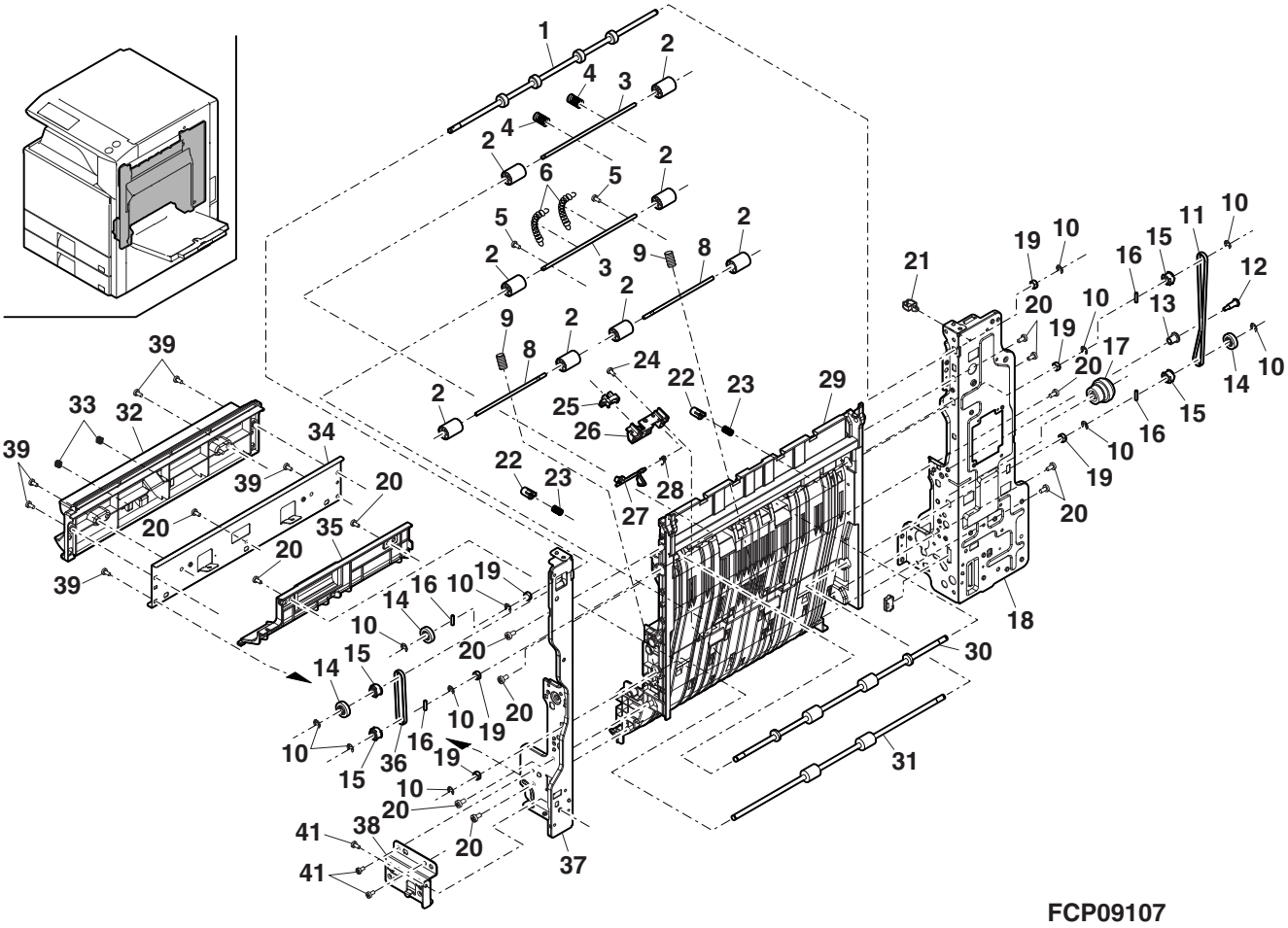

37 排紙ﾕﾆｯﾄ 1(Delivery unit 1)

NO.	PARTS CODE	PRICE RANK Ex.	PRICE RANK Ja.	NEW MARK	PART RANK	DESCRIPTION	
1	XEBS730P08000	AC	DD		C	Screw(3×8)	ﾋﾞｽ
2	QEARP0204FCZZ	AD	DJ	N	C	Diselectrode earth plate R	除電ｱｰｽ板 R
3	MSPRC3464FCZZ	AB	DJ	N	C	Delivery follower pressure spring	排紙従動加圧ｽﾌﾟﾘﾝｸﾞ
4	MLEVP0961FCZZ	AD	DJ	N	C	Full detect lever	満杯検知ﾚﾊﾞｰ
5	MLEVP0960FCZZ	AC	DJ	N	C	Full detect actuator	満杯検知ｱｸﾁｪｰﾀｰ
6	PCLR-0479FCZZ	AC	DJ		C	FD slide collar	FD ｽﾗｲﾄﾞｶﾗｰ
7	PBRSR0231FCZ2	AX	FG	N	B	Diselectrode brush	除電ﾌﾞﾗｼ
8	PGiDM2109FCZZ	BB	GD	N	C	Shifter PG	ｼﾌﾀｰ PG
9	LPiNS0258FCZZ	AA	DD		C	Spring pin(3-8)	ｽﾌﾟﾘﾝｸﾞﾋﾟﾝ
10	NBRGP0740FCZZ	AQ	EQ	N	C	Shifter thrust bearing	ｼﾌﾀｰｽﾗｽﾄ軸受
11	XRESP50-06000	AA	DD		C	E ring(E5)	E ﾘﾝｸﾞ
12	NBRGP0674FCZZ	AE	DJ		C	Belt idle bearing	ﾍﾞﾙﾄｱｲﾄﾞﾙ軸受
13	NSFTZ2963FCZZ	AH	DX	N	C	Delivery follower shaft	排紙従動軸
14	QEARP0203FCZZ	AD	DJ	N	C	Diselectrode earth plate F	除電ｱｰｽ板 F
15	PCLR-0518FCZ1	AD	DJ	N	C	Shifter follower collar	ｼﾌﾀｰ従動ｺﾛ
16	NROLR1539FCZZ	AV	FG		A	Delivery roller	排紙ﾛｰﾗｰ
17	PDUC-0185FCZZ	AQ	EQ	N	C	Exhaust fan duct	排気ﾌｧﾝﾀﾞｸﾄ
18	XEBS740P10000	AA	DD		C	Screw(4×10)	ﾋﾞｽ
20	LPLTP6762FCZZ	AC	DJ	N	C	Exhaust duct plate	排気ﾀﾞｸﾄ板
21	QEARP0205FCZZ	AC	DJ	N	C	Shifter earth plate	ｼﾌﾀｰｱｰｽ板
22	PGiDM2133FCZZ	AQ	EQ	N	C	Delivery upper PG	排紙上 PG
23	XRESP40-05000	AA	DD		C	E ring(E4)	E ﾘﾝｸﾞ
24	NGERH1531FCZZ	AD	DJ		C	Shifter gear(24/50)	ｼﾌﾀｰｷﾞﾔ
25	VHPLG248NL1-1	AF	DS	N	B	Shift home detect sensor	ｼﾌﾄﾎｰﾑ検知ｾﾝｻｰ
26	CPLTM6535FC01	AG	DX	N	C	Slide motor fixing plate	ｽﾗｲﾄﾞﾓｰﾀｰ取付板
27	LHLDW1263FCZZ	AC	DJ		C	Edge saddle(EDS0607M)	ｴｯｼﾞｻﾄﾞﾙ
28	NGERH1657FCZZ	AE	DJ	N	C	Delivery roller drive gear	排紙ﾛｰﾗｰ駆動ｷﾞﾔ
29	RMOTS0890FCNA	BA	EZ		B	Slide motor	ｽﾗｲﾄﾞﾓｰﾀｰ
30	XHBS730P06000	AC	DD		C	Screw(3×6)	ﾋﾞｽ
33	XHBS740P08000	AA	DD		C	Screw(4×8)	ﾋﾞｽ
34	PSHEZ5470FCZZ	AF	DS		C	Full detect sheet	満杯検知ｼｰﾄ
35	LFiX-0627FCZZ	AD	DJ	N	C	Paper fixing arm	用紙押えｱｰﾑ
36	LHLDZ1715FCZZ	AE	DJ	N	C	Paper fixing holder	用紙押えﾎﾙﾀﾞｰ
501	CGiDM2109DS51	AZ	FQ	N	E	Shifter sub unit	ｼﾌﾀｰｻﾌﾞﾕﾆｯﾄ
502	CGiDM2133DS51	BF	GN	N	E	Delivery upper PG unit	排紙上 PG ﾕﾆｯﾄ
503	CPLTM6535DS51	AX	FG	N	E	Shifter drive unit	ｼﾌﾀｰ駆動ﾕﾆｯﾄ
	(Unit)						
901	DUNT-7428DSZZ	BV	NU	N	E	Delivery unit (Include Block [38])	排紙ﾕﾆｯﾄ

37 排紙ﾕﾆｯﾄ 1(Delivery unit 1)

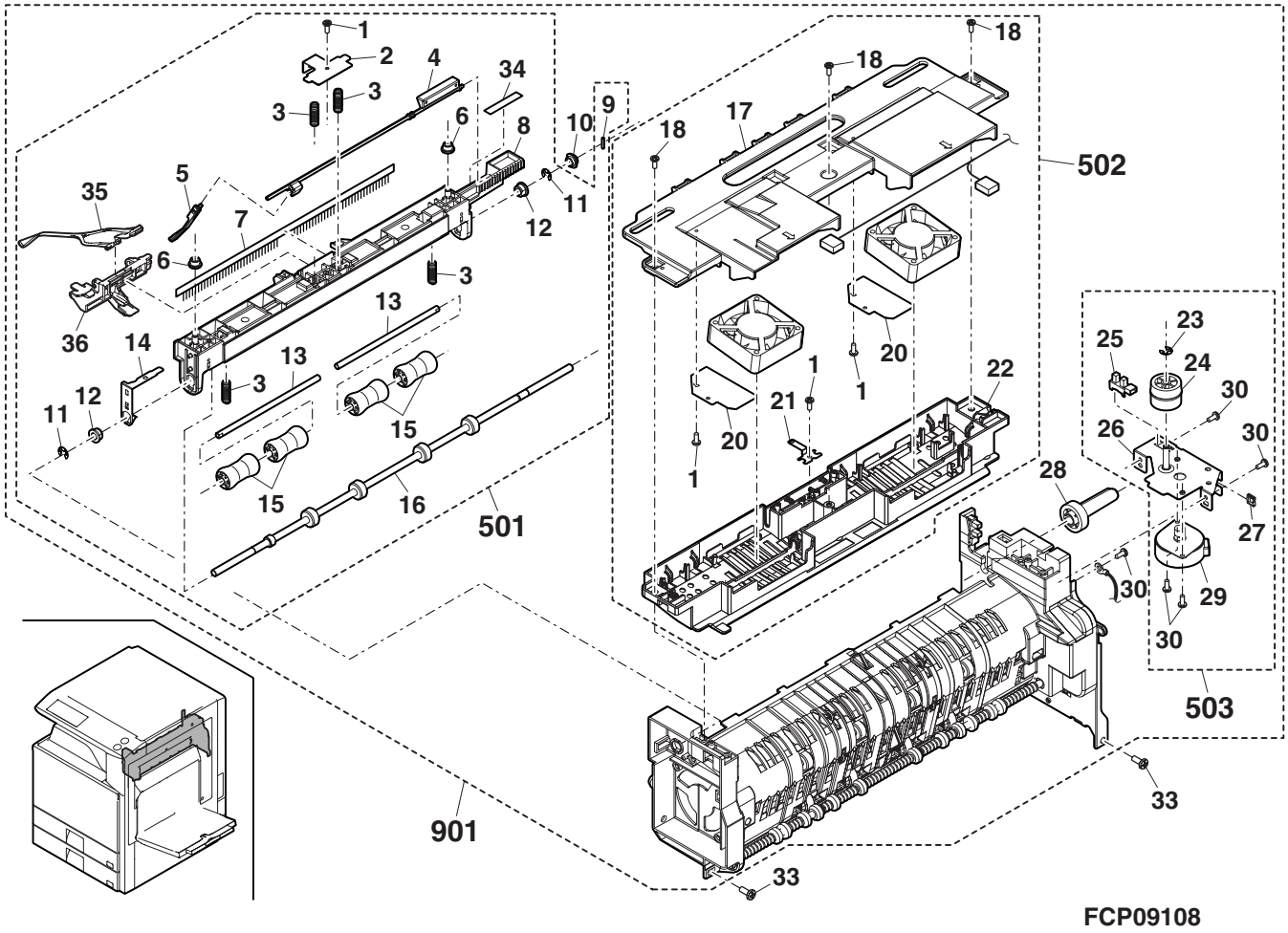

38 排紙ﾕﾆｯﾄ 2(Delivery unit 2)

NO.	PARTS CODE	PRICE RANK Ex.	PRICE RANK Ja.	NEW MARK	PART RANK	DESCRIPTION	
1	XRESP50-06000	AA	DD		C	E ring(E5)	Eﾘﾝｸﾞ
2	NBLTH0462FCZZ	AQ	EQ	N	B	Reverse drive belt	反転駆動ﾍﾞﾙﾄ
3	NPLYZ0441FCZZ	AC	DJ	N	C	Pulley(22P)	ﾌﾟｰﾘｰ
4	NGERH1629FCZZ	AC	DJ	N	C	Paper feed gear(24T)	給紙ｷﾞﾔ
5	NSFTZ2965FCZZ	BQ	LP	N	C	Revearse drive idle gear boss	反転駆動ｱｲﾄﾞﾙｷﾞﾔﾎﾞｽ
6	LPiNS0133FCZZ	AA	DD		C	Pin(2-10)	平行ﾋﾟﾝ
7	LPLTM6534FCZZ	AB	DJ	N	C	Shifter bearing plate	ｼﾌﾀｰ軸受板
8	NBRGP0674FCZZ	AE	DJ		C	Belt idle bearing	ﾍﾞﾙﾄｱｲﾄﾞﾙ軸受
9	VHPLG248NL1-1	AF	DS	N	B	POD sensor	POD ｾﾝｻｰ
10	MLEVP0959FCZZ	AD	DJ	N	C	Delivery actuator	排紙ｱｸﾁｪｰﾀｰ
11	MSPRD3461FCZZ	AB	DJ	N	C	Delivery actuator return spring	排紙ｱｸﾁｪｰﾀｰ復帰ｽﾌﾟﾘﾝｸﾞ
12	MLEVP0958FCZZ	AD	DJ	N	C	Fusing rear actuator	定着後ｱｸﾁｪｰﾀｰ
14	VHPGP1A71L3-1	AG	DS		B	Full detect sensor	満杯検知ｾﾝｻｰ
15	PGiDM2108FCZZ	BT	NE	N	C	Delivery PG	排紙 PG
16	NSFTZ2962FCZZ	BQ	LP	N	C	Fusing rear idle shaft	定着後ｱｲﾄﾞﾙ軸
17	NGERH1683FCZZ	AC	DJ	N	C	Idle gear(29T)	ｱｲﾄﾞﾙｷﾞﾔ
18	NGERH1656FCZZ	AD	DJ	N	C	Gear(29/26T)	ｷﾞﾔ
19	NSFTZ2964FCZZ	AM	EG	N	C	Fusing rear drive idle gear boss	定着後駆動ｱｲﾄﾞﾙｷﾞﾔﾎﾞｽ
20	XEBS740P10000	AA	DD		C	Screw(4×10)	ﾋﾞｽ
21	XHBS730P06000	AC	DD		C	Screw(3×6)	ﾋﾞｽ
23	MSPRD3462FCZZ	AB	DJ	N	C	Release lever return spring	解除ﾚﾊﾞｰ復帰ｽﾌﾟﾘﾝｸﾞ
24	MLEVP0933FCZZ	AC	DJ	N	C	Joint gear release lever	連結ｷﾞﾔ解除ﾚﾊﾞｰ
25	XRESP40-05000	AA	DD		C	E ring(E4)	Eﾘﾝｸﾞ
27	LHLDW1263FCZZ	AC	DJ		C	Edge saddle(EDS0607M)	ｴｯｼﾞｻﾄﾞﾙ
28	NBLTH0455FCZZ	AQ	EQ	N	B	Motor reduction belt	ﾓｰﾀｰ減速ﾍﾞﾙﾄ
29	NGERH1655FCZZ	AD	DJ	N	C	Gear(20T/27P)	ｷﾞﾔ
30	QEARP0201FCZZ	AC	DJ	N	C	Roller earth plate	ﾛｰﾗｰｱｰｽ板
31	MSPRT3063FCZZ	AC	DJ		C	Drive joint spring	駆動連結ｽﾌﾟﾘﾝｸﾞ
32	NGERH1693FCZZ	AH	DX	N	C	Separate gear(18T)	分離ｷﾞﾔ
33	JHiM-0006FCZZ	BA	FX	N	C	Mini rope	ﾐﾆﾛｰﾌﾟ
34	CPLTM6533FC01	AG	DX	N	C	Drive joint plate	駆動連結板
35	MSPRT3463FCZZ	AC	DJ	N	C	Rope tension spring	ﾛｰﾌﾟﾃﾝｼｮﾝｽﾌﾟﾘﾝｸﾞ
36	NGERH1509FCZZ	AE	DJ		C	Fusing gear(35T)	定着ｷﾞﾔ
37	XRESP70-08000	AA	DD		C	E ring(E7)	Eﾘﾝｸﾞ
38	PCLR-0477FCZZ	AE	DJ		C	HR drive gear collar	HR 駆動ｷﾞﾔｶﾗｰ
40	NGERH1659FCZZ	AC	DJ	N	C	Drive gear(59H25T)	駆動ｷﾞﾔ
41	CFRM-1176FC02	AQ	EQ	N	C	Delivery drive frame	排紙駆動ﾌﾚｰﾑ
42	PCLR-0501FCZZ	AB	DJ	N	C	Delivery guide collar	排紙ｶﾞｲﾄﾞｺﾛ
44	PCLR-0498FCZZ	AE	DS	N	C	Fusing rear follwer collar	定着後従動ｺﾛ
45	MSPRT0229GCAZ	AC	DJ		C	Fusing spring R	定着ｽﾌﾟﾘﾝｸﾞ R
46	PBRSS0237FCZ1	AG	DX	N	B	Fusing discharger brush	定着除電ﾌﾞﾗｼ
501	CPLTM6533DS51	AP	EQ	N	E	Fuisig drive unit	定着駆動ﾕﾆｯﾄ
502	CFRM-1176DS51	BF	GN	N	E	Delivery drive unit	排紙駆動ﾕﾆｯﾄ
503	CGiDM2108DS51	BG	GT	N	E	Delivery main unit	排紙ﾒｲﾝﾕﾆｯﾄ
	(Unit)						
901	DUNT-7428DSZZ	BV	NU	N	E	Delivery unit (Include Block [37])	排紙ﾕﾆｯﾄ

38 排紙ﾕﾆｯﾄ 2(Delivery unit 2)

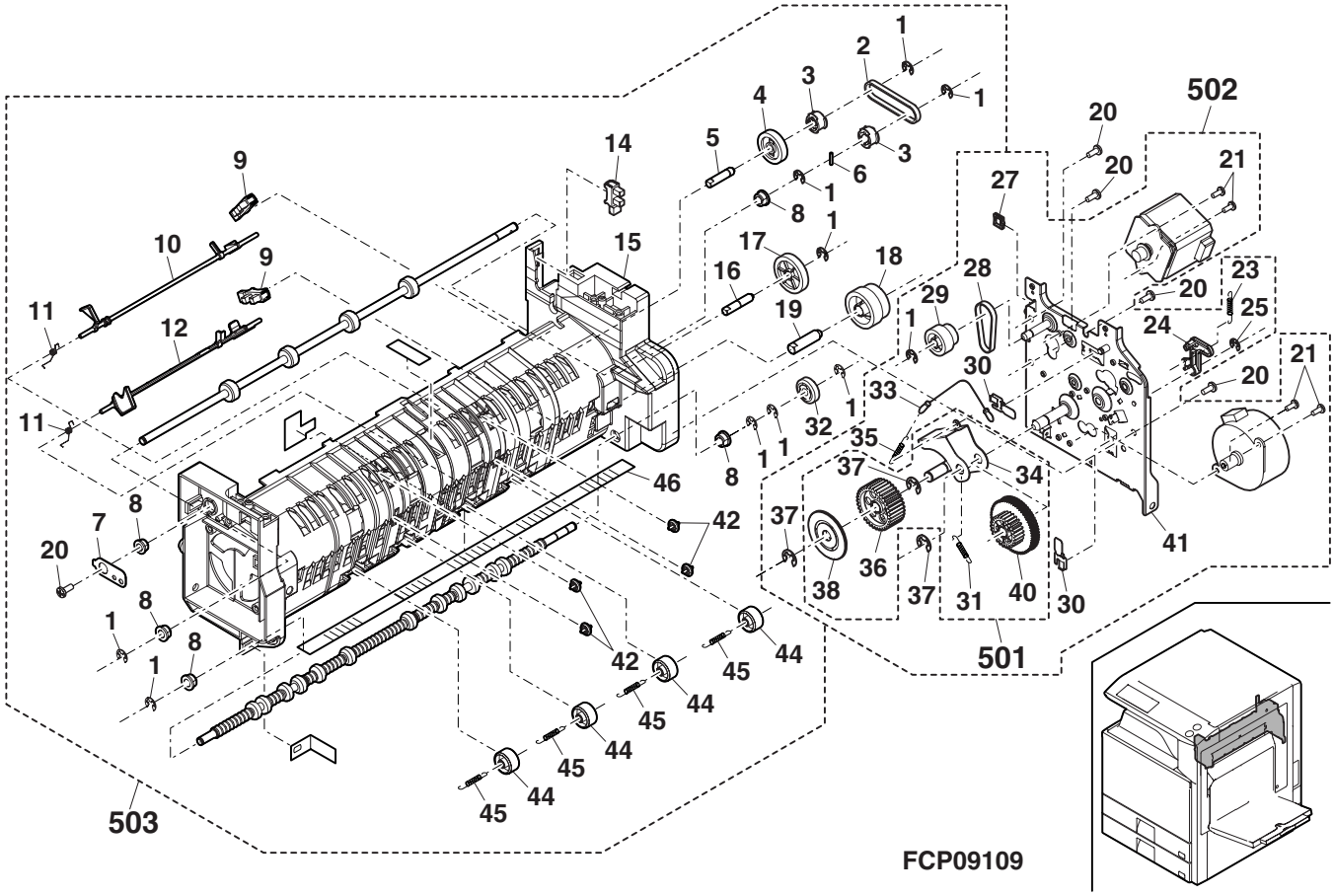

39 給紙駆動部 (Paper feed drive section)

NO.	PARTS CODE	PRICE RANK Ex.	PRICE RANK Ja.	NEW MARK	PART RANK	DESCRIPTION	
1	NGERH1679FCZZ	AD	DJ	N	C	Joint gear(21T)	連結ｷﾞﾔ
2	LPiNS0133FCZZ	AA	DD		C	Pin(2-10)	平行ﾋﾟﾝ
3	LFRM-1148FCZ1	AW	FG	N	C	Drive frame lower A	駆動ﾌﾚｰﾑ下 A
4	NGERH1640FCZZ	AC	DJ	N	C	Gear(20T)	ｷﾞﾔ
5	LPiNS0337FCZZ	AB	DJ		C	Pin(3-12)	平行ﾋﾟﾝ
7	NBRGC0136FCZ1	AC	DJ		C	Bearing(φ6)	軸受
8	XRESP50-06000	AA	DD		C	E ring(E5)	E ﾘﾝｸﾞ
9	NSFTZ2940FCZZ	AP	EQ	N	C	MPF transport shaft	手差し搬送軸
10	NGERH1617FCZZ	AC	DJ	N	C	ADU joint gear(28T)	ADU 連結ｷﾞﾔ
12	NSFTZ2941FCZZ	AF	DS	N	C	Drive gear 1	駆動ｷﾞﾔ軸 1
13	NPLYZ0443FCZZ	AD	DJ	N	C	Gear pulley(16T/43P)	ｷﾞﾔﾌﾟｰﾘｰ
14	NBLTH0451FCZZ	AQ	EQ	N	B	Belt(2GT-132)	ﾍﾞﾙﾄ
15	LFRM-1164FCZZ	AE	DS	N	C	Drive frame upper B	駆動ﾌﾚｰﾑ上 B
16	XEBS740P10000	AA	DD		C	Screw(4×10)	ﾋﾞｽ
18	XHBS730P08000	AB	DD		C	Screw(3×8)	ﾋﾞｽ
20	QEARP0201FCZZ	AC	DJ	N	C	Roller earth plate	ﾛｰﾗｰｱｰｽ板
21	NSFTZ2944FCZZ	AF	DS	N	C	Drive gear shaft 2	駆動ｷﾞﾔ軸 2
22	NGERH1405FCZ1	AG	DS		C	Gear(43T)	ｷﾞﾔ
23	NBRGC0504FCZZ	AC	DJ		C	Bearing(φ8)	軸受
24	XRESP70-08000	AA	DD		C	E ring(E7)	E ﾘﾝｸﾞ
25	NSFTZ2947FCZZ	AR	EQ	N	C	Manual paper feed shaft	手差し軸
26	NGERH1644FCZZ	AC	DJ	N	C	Gear(18T/26T)	ｷﾞﾔ
27	NGERH1626FCZZ	AD	DJ	N	C	Gear(29T)	ｷﾞﾔ
28	NGERH1643FCZ1	AD	DJ	N	C	Gear(18T/56T)	ｷﾞﾔ
29	NSFTZ2945FCZZ	AQ	EQ	N	C	Paper feed clutch shaft	給紙ｸﾗｯﾁ軸
30	XRESP40-06000	AA	DD		C	E ring(E4)	E ﾘﾝｸﾞ
31	PCLC-0342FCZZ	BA	FX	N	B	Paper feed clutch(2.5K)	給紙ｸﾗｯﾁ
33	NSFTZ2946FCZZ	AS	EQ	N	C	Separate rear clutch shaft	分離後ｸﾗｯﾁ軸
34	NPLYZ0444FCZZ	AC	DJ	N	C	Pulley(22P)	ﾌﾟｰﾘｰ
35	NBLTH0454FCZZ	AU	EZ	N	B	Separate rear belt	分離後ﾍﾞﾙﾄ
36	NSFTZ2943FCZZ	AR	EQ	N	C	Separate rear shaft	分離後軸
37	LFRM-1162FCZZ	AH	DX	N	C	Drive frame	駆動ﾌﾚｰﾑ上
38	RMOTP0928FCPZ	BH	HC	N	B	Paper feed motor	給紙ﾓｰﾀｰ
39	XHBS740P08000	AA	DD		C	Screw(4×8)	ﾋﾞｽ
40	NCPL-0052FCZZ	AH	DX		C	Lift coupling	ﾘﾌﾄｶｯﾌﾟﾘﾝｸﾞ
41	MSPRC2907FCZ1	AC	DJ		C	Lift up spring	ﾘﾌﾄｱｯﾌﾟｽﾌﾟﾘﾝｸﾞ
42	CCÖVP1607FC358	BB	GN		E	Lift motor A	ﾘﾌﾄﾓｰﾀｰ A
43	XHBS730P35000	AK	DX	N	C	Screw(3×35)	ﾋﾞｽ
44	NGERH1629FCZZ	AC	DJ	N	C	Paper feed gear(24T)	給紙ｷﾞﾔ
45	LSUPP0011FCZZ	AB	DD		C	Card spacer(PS-3N)	ｶｰﾄﾞｽﾍﾟｰｻｰ
	(Unit)						
901	CFRM-1148DS51	BV	RB	N	E	Paper feed drive unit	給紙駆動ﾕﾆｯﾄ

39 給紙駆動部 (Paper feed drive section)

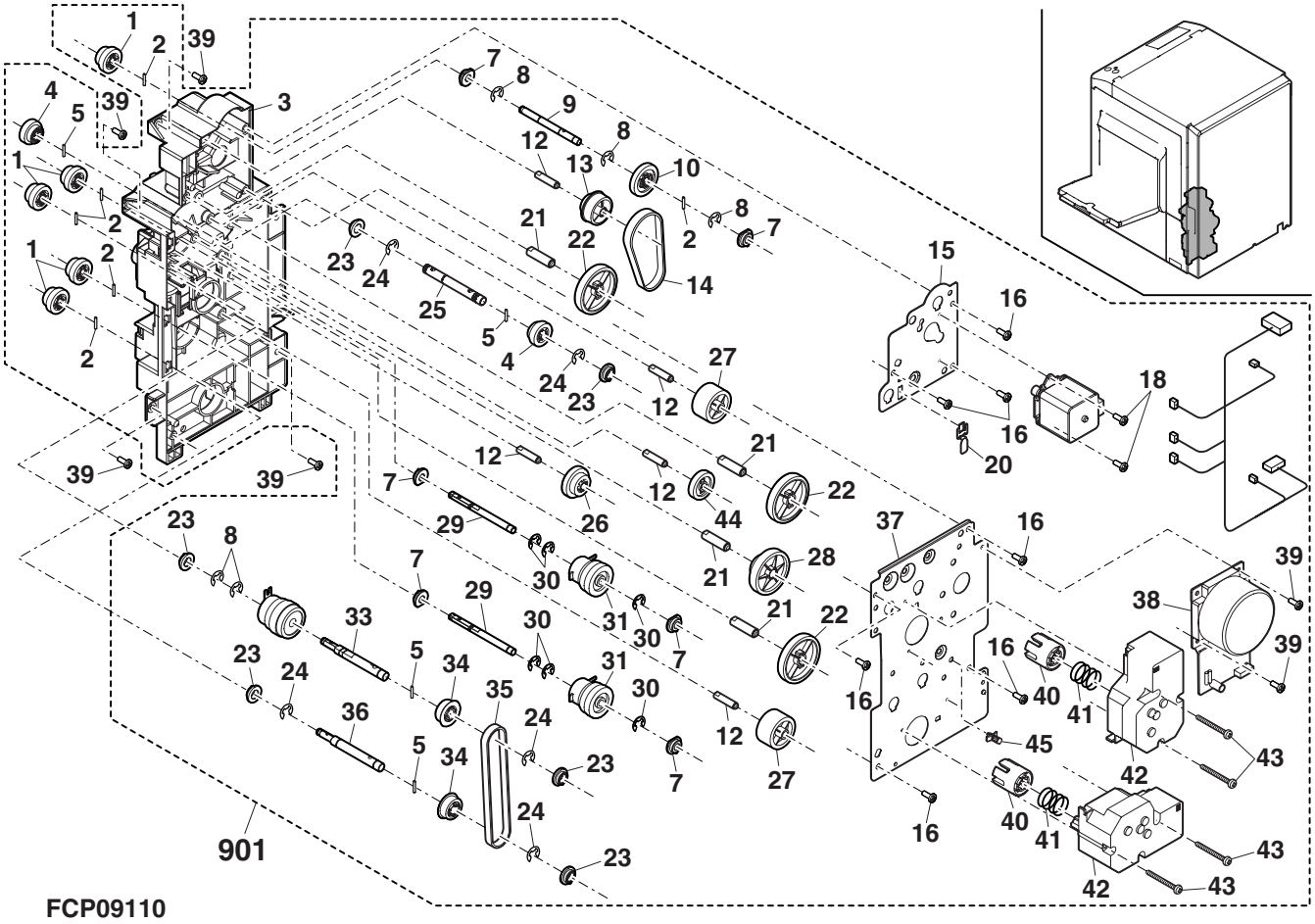

40 ﾒｲﾝ駆動部 1(Main drive section 1)

NO.	PARTS CODE	PRICE RANK Ex.	PRICE RANK Ja.	NEW MARK	PART RANK	DESCRIPTION	
1	LHLDZ1627FCZZ	AD	DJ	N	C	Frame joint holder	ﾌﾚｰﾑ連結ﾎﾙﾀﾞｰ
2	CFRM-1187DS51	BH	GX	N	C	Drive sub frame	駆動ｻﾌﾞﾌﾚｰﾑ
3	XRESP50-06000	AA	DD		C	E ring(E5)	E ﾘﾝｸﾞ
4	NBRGM0501FCZZ	AB	DJ		C	Metal bearing	ﾒﾀﾙ軸受
5	NSFTZ2924FCZZ	AT	EZ	N	C	Separate coupling shaft	離接ｶｯﾌﾟﾘﾝｸﾞ軸
6	XRESP70-08000	AA	DD		C	E ring(E7)	E ﾘﾝｸﾞ
7	NBRGC0319FCZ1	AC	DJ		C	Bearing	軸受
8	XBPS730P06KS0	AB	DD		C	Screw(3×6KS)	ﾋﾞｽ
9	NCPL-0080FCZZ	AC	DJ	N	C	TN coupling	TN ｶｯﾌﾟﾘﾝｸﾞ
10	MSPRC3396FCZZ	AB	DJ	N	C	TN coupling spring	TN ｶｯﾌﾟﾘﾝｸﾞｽﾌﾟﾘﾝｸﾞ
11	NSFTZ2926FCZZ	AS	EQ	N	C	TN coupling shaft	TN ｶｯﾌﾟﾘﾝｸﾞｼｬﾌﾄ
12	NBRGP0742FCZZ	AC	DJ	N	C	Coupling bearing	ｶｯﾌﾟﾘﾝｸﾞ軸受
14	MJNTP0030FCZZ	AB	DJ	N	C	TN motor joint	TN ﾓｰﾀｰｼﾞｮｲﾝﾄ
15	PRNGP0109FCZZ	AA	DJ		C	Crescent ring	ｸﾚｾﾝﾄﾘﾝｸﾞ
16	PSHEZ5381FCZZ	AC	DJ	N	C	Pulley sheet R	ﾌﾟｰﾘｰｼｰﾄ R
17	NBRGY0772FCZZ	AP	EQ	N	C	Bearing(φ8-16)	軸受
18	NGERH1651FCZZ	AC	DJ	N	C	DV reduction gear	DV 減速ｷﾞｬ
19	NBRGY0773FCZZ	AP	EQ	N	C	Bearing(φ8-22)	軸受
22	XHBS730P08000	AB	DD		C	Screw(3×8)	ﾋﾞｽ
24	NGERH1665FCZZ	AC	DJ	N	C	Waste toner drive gear	廃ﾄﾅｰ駆動ｷﾞｬ
25	NSFTZ2922FCZZ	AZ	FX	N	C	Drum drive shaft	ﾄﾞﾗﾑ駆動軸
26	XRESP90-08000	AA	DD		C	E ring(E9)	E ﾘﾝｸﾞ
27	LPiNS0278FCZZ	AB	DJ		C	Spring pin(3-11)	ｽﾌﾟﾘﾝｸﾞﾋﾟﾝ
28	NGERH1630FCZZ	AS	EQ	N	C	Drum drive gear	ﾄﾞﾗﾑ駆動ｷﾞｬ
29	CFRM-1186FC01	AT	EZ	N	C	Drive frame	駆動ﾌﾚｰﾑ
30	NGERH1631FCZZ	AR	EQ	N	C	Drum idle gear	ﾄﾞﾗﾑｱｲﾄﾞﾙｷﾞｬ
31	LPiNS0133FCZZ	AA	DD		C	Pin(2-10)	平行ﾋﾟﾝ
32	NPLYZ0436FCZZ	AC	DJ	N	C	Separate pulley(24/35P)	離接ﾌﾟｰﾘｰ
33	NSFTZ2923FCZZ	AQ	EQ	N	C	Clutch shaft	ｸﾗｯﾁ軸
34	NGERH1625FCZZ	AR	EQ	N	C	Belt reduction gear M	ﾍﾞﾙﾄ減速ｷﾞｬ M
35	NGERH1610FCZZ	AS	EQ	N	C	Belt reduction gear	ﾍﾞﾙﾄ減速ｷﾞｬ
36	NBLTH0446FCZZ	AU	EZ	N	B	BK DV belt	BK 現像ﾍﾞﾙﾄ
37	NCPL-0074FCZ1	AD	DJ	N	C	DV coupling	DV ｶｯﾌﾟﾘﾝｸﾞ
38	CSFTZ2921DS51	AL	EB	N	C	DV drive shaft	DV 駆動ｼｬﾌﾄ
39	MSPRC3366FCZZ	AB	DJ	N	C	DV coupling spring	DV ｶｯﾌﾟﾘﾝｸﾞｽﾌﾟﾘﾝｸﾞ
40	NBRGY0466FCZZ	AK	EB		C	Bearing(φ8-16)	軸受
41	XBBS740P08000	AA	DD		C	Screw(4×8)	ﾋﾞｽ
42	NPLYZ0455FCZZ	AR	EQ	N	C	DV pulley(35P)	DV ﾌﾟｰﾘｰ
43	NPLYZ0445FCZZ	AC	DJ	N	C	DV pulley(24P)	DV ﾌﾟｰﾘｰ
44	LPiNS0337FCZZ	AB	DJ		C	Pin(3-12)	平行ﾋﾟﾝ
45	NBLTH0447FCZZ	AU	EZ	N	B	DV joint belt	DV 連結ﾍﾞﾙﾄ
46	NBLTH0448FCZZ	AX	FG	N	B	DV drive belt CL	DV 駆動ﾍﾞﾙﾄ CL
47	NBRGC0632FCZ1	AE	DS		C	Bearing(8×16)	軸受
48	NBLTH0449FCZZ	AU	EZ	N	B	DV joint belt BK	DV 連結ﾍﾞﾙﾄ BK
50	CSFTZ2920DS51	AM	EG	N	E	Belt drive shaft	ﾍﾞﾙﾄ駆動軸
51	NGERH1642FCZZ	AE	DJ	N	C	Gear(20/57T)	ｷﾞｬ
52	LHLDZ1554FCZZ	AE	DJ		C	PS holder	PS ﾎﾙﾀﾞｰ
53	LX-BZ0670FCP1	AC	DD	N	C	Screw	虫ﾋﾞｽ
54	NGERH0851FCZZ	AD	DJ		C	ADU gear(33T)	ADU ｷﾞｬ
55	LPiNS0155FCZZ	AA	DD		C	Pin(3-10)	平行ﾋﾟﾝ
56	NSFTZ2939FCZZ	AR	EQ	N	C	PS drive shaft	PS 駆動軸
57	CBRGP0739DS51	AP	EQ	N	E	DSD bearing	DSD ﾍﾞｱﾘﾝｸﾞ
58	LX-BZ1053FCZZ	AC	DD	N	C	Red screw(3×8)	赤ﾋﾞｽ
59	LX-WZ0454FCZZ	AD	DD	N	C	Poly slider(φ8-17)	ﾎﾟﾘｽﾗｲﾀﾞｰ
60	LX-WZ2011SCZZ	AA	DD		C	Poly slider	ﾎﾟﾘｽﾗｲﾀﾞｰ
61	PSHEP5486FCZZ	AC	DJ	N	C	Pulley sheet	ﾌﾟｰﾘｰｼｰﾄ
	(Unit)						
901	CFRM-1186DS71	BU	NN	N	E	Main drive unit	ﾒｲﾝ駆動ﾕﾆｯﾄ

40 ﾒｲﾝ駆動部 1(Main drive section 1)

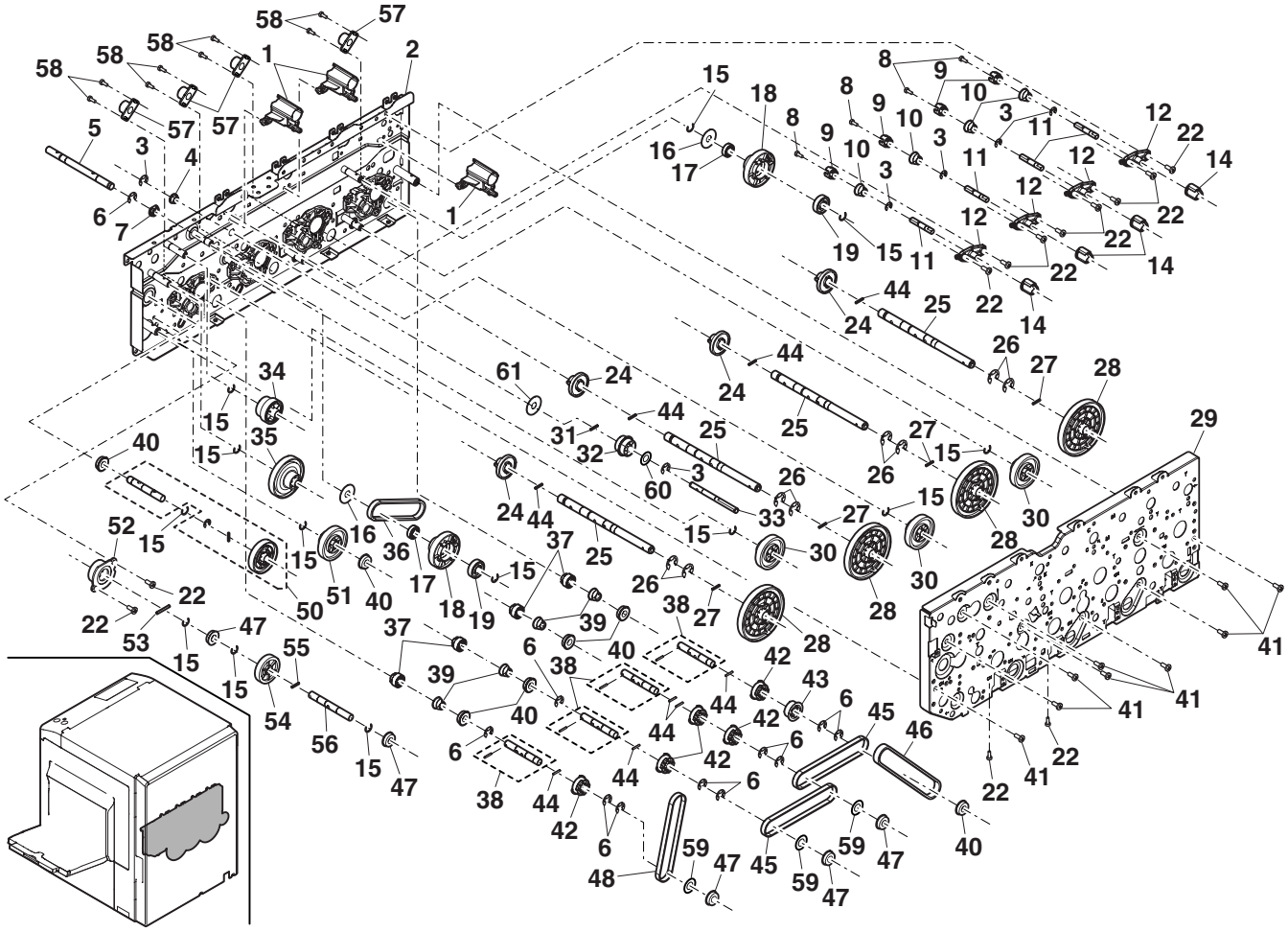

FCP09111

41 ﾒｲﾝ駆動部 2(Main drive section 2)

NO.	PARTS CODE	PRICE RANK Ex.	PRICE RANK Ja.	NEW MARK	PART RANK	DESCRIPTION	
1	DHAi-3709FCZZ	AW	FG	N	C	CRUM harness	CRUM ﾊｰﾈｽ
2	LX-BZ0901FCPZ	AC	DD	N	C	Screw	ﾋﾞｽ
3	NGERH1645FCZZ	AC	DJ	N	C	Separate input gear	離接入力ｷﾞｬ
4	XHBS740P08000	AA	DD		C	Screw(4×8)	ﾋﾞｽ
5	NCPL-0077FCZZ	AR	EQ	N	C	DR joint coupling R	DR 連結ｶｯﾌﾟﾘﾝｸﾞ R
6	PRNGP0110FCZZ	AA	DJ		C	C ring	C ﾘﾝｸﾞ
7	NCPL-0078FCZZ	AR	EQ	N	C	Belt drive joint coupling	ﾍﾞﾙﾄ駆動連結ｶｯﾌﾟﾘﾝｸﾞ
8	LPiNS0278FCZZ	AB	DJ		C	Spring pin(3-11)	ｽﾌﾟﾘﾝｸﾞﾋﾟﾝ
9	PRNGP0109FCZZ	AA	DJ		C	Crescent ring	ｸﾚｾﾝﾄﾘﾝｸﾞ
11	RMOTD0930FCPZ	BB	GD	N	B	Toner motor	ﾄﾅｰﾓｰﾀｰ
12	RMOTP0929FCPZ	BH	HC	N	B	DV drive motor	現像駆動ﾓｰﾀｰ
13	XHBS730P08000	AB	DD		C	Screw(3×8)	ﾋﾞｽ
17	PCLC-0342FCZZ	BA	FX	N	B	Paper feed clutch(2.5K)	給紙ｸﾗｯﾁ
18	NBRGM0501FCZZ	AB	DJ		C	Metal bearing	ﾒﾀﾙ軸受
19	XRESP50-06000	AA	DD		C	E ring(E5)	E ﾘﾝｸﾞ
20	NBRGC0319FCZ1	AC	DJ		C	Bearing	軸受
21	NGERH1667FCZZ	AC	DJ	N	C	Separate drive gear	離接駆動ｷﾞｬ
22	XRESP70-08000	AA	DD		C	E ring(E7)	E ﾘﾝｸﾞ
23	NGERH1652FCZZ	AC	DJ	N	C	Separate reduction gear 1	離接減速ｷﾞｬ 1
24	CPWBF0083QSE5	AU	EZ		E	Sensor PWB	ｾﾝｻｰ基板
25	RMOTS0921FCPZ	AT	EZ	N	B	PS motor	PS ﾓｰﾀｰ
26	NFLY-0011FCZZ	AB	DJ	N	C	Fly wheel Y	ﾌﾗｲﾎｲｰﾙ Y
27	CFLY-0013FC01	AN	EG	N	C	Fly wheel	ﾌﾗｲﾎｲｰﾙ
29	XBPS740P08KS0	AB	DD		C	Screw(4×8KS)	ﾋﾞｽ
30	NBRGC0754FCZZ	AR	EQ	N	C	Drum drive bearing B	ﾄﾞﾗﾑ駆動軸受 B
31	MSPRP3337FCZZ	AC	DJ	N	C	Drive shaft earth spring	駆動軸ｱｰｽｽﾌﾟﾘﾝｸﾞ
32	LHLDZ1676FCZ1	AP	EQ	N	C	Drive H holder	駆動 H ﾎﾙﾀﾞｰ
34	LHLDW2048SCZZ	AB	DD		C	Wire saddle(LWS-2W)	ﾜｲﾔｰｻﾄﾞﾙ
35	LPiNS0337FCZZ	AB	DJ		C	Pin(3-12)	平行ﾋﾟﾝ
501	CFRM-1186DS71	BU	NN	N	E	Main drive unit	ﾒｲﾝ駆動ﾕﾆｯﾄ
	(Unit)						
901	CFRM-1186DS51	CD	UD	N	E	Main drive unit	ﾒｲﾝ駆動ﾕﾆｯﾄ

41 ﾒｲﾝ駆動部 2(Main drive section 2)

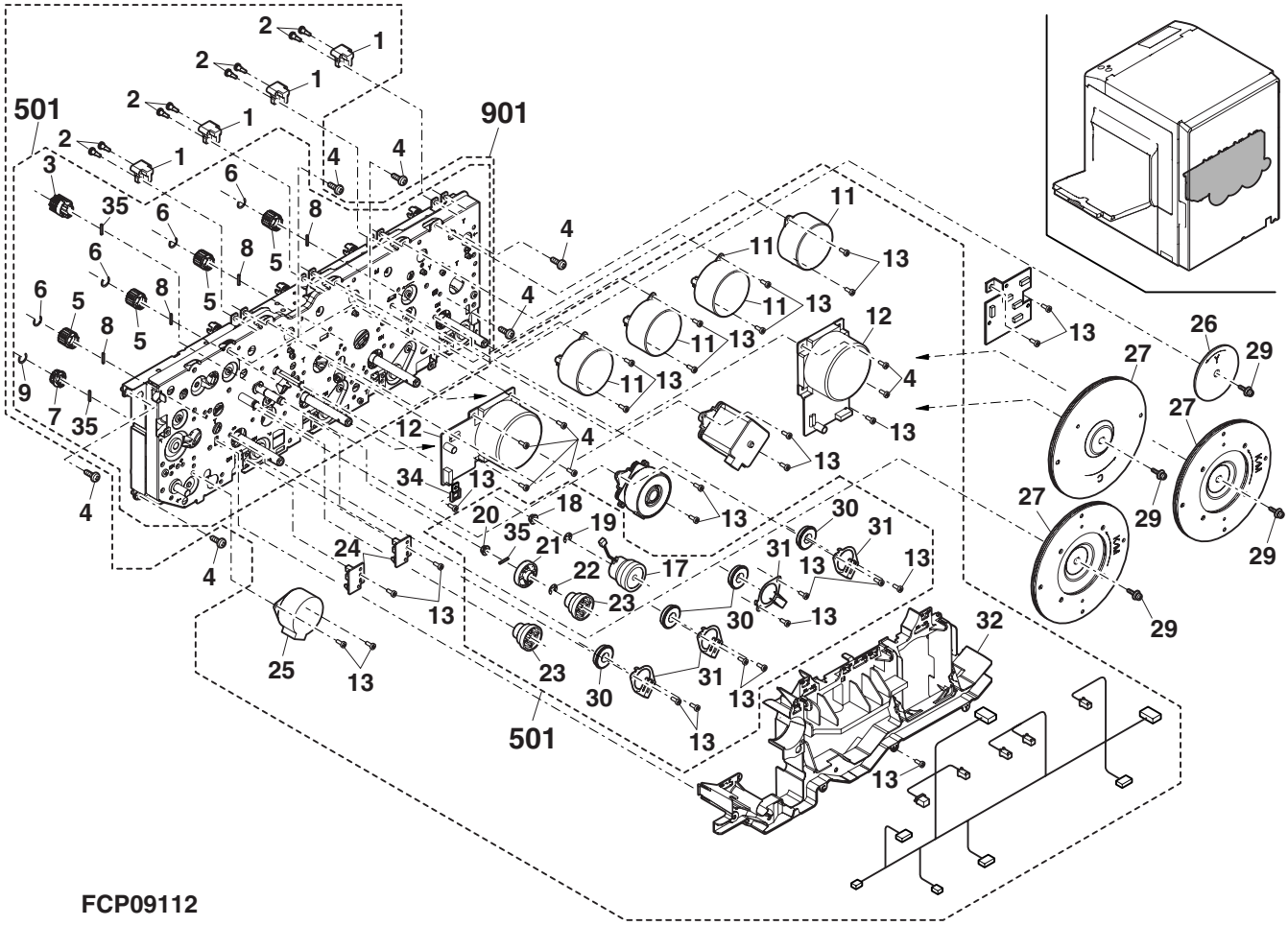

42 ｺﾝﾄﾛｰﾙ BOX 1(Controll BOX 1)

NO.	PARTS CODE	PRICE RANK Ex.	PRICE RANK Ja.	NEW MARK	PART RANK	DESCRIPTION	
1	CRALM0236FC01	AP	EQ	N	C	MFP PWB rail lower	MFP 基板ﾚｰﾙ下
2	XHBS730P08000	AB	DD		C	Screw(3×8)	ﾋﾞｽ
3	LPLTM6595FCZZ	AR	EQ		C	PCU PWB fixing plate	PCU 基板取付板
4	CPWBX1714FCE4	BZ	TF	N	E	PCU PWB [MX-2300G/FG/N]	PCU 基板
	CPWBX1714FCE1	BZ	TF	N	E	PCU PWB [MX-2700G/FG/N]	PCU 基板
5	VHi28F161L18C	AV	FG	N	B	PCU flash PWB	PCU ﾌﾗｯｼｭ基板
7	PSLDM0186FCZZ	AQ	EQ	N	C	MFP PWB shield plate lower	MFP 基板ｼｰﾙﾄﾞ板底
8	XHBS730P30000	AB	DD	N	C	Screw(3×30)	ﾋﾞｽ
10	CRALM0235FC01	AP	EQ	N	C	MFP PWB rail upper	MFP 基板ﾚｰﾙ上
11	PSLDM0187FCZZ	AM	EG	N	C	MFP PWB shield plate upper	MFP 基板ｼｰﾙﾄﾞ板上
12	LHLDW1264FCZZ	AD	DJ		C	Wire saddle(LWS-8S-2.5W)	ﾜｲﾔｰｻﾄﾞﾙ
13	QCNW-0226FCZ1	AD	DJ	N	C	PCU mother FFC	PCU ﾏｻﾞｰ間 FFC
15	LHLDW1057FCZZ	AB	DD	N	C	Wire saddle(LWS35)	ﾜｲﾔｰｻﾄﾞﾙ
16	LHLDW1757FCPZ	AC	DJ	N	C	Harness lifter	ﾊｰﾈｽﾘﾌﾀｰ

43 ｺﾝﾄﾛｰﾙ BOX 2(Controll BOX 2)

NO.	PARTS CODE	PRICE RANK Ex.	PRICE RANK Ja.	NEW MARK	PART RANK	DESCRIPTION	
2	LPLTM6592FCZZ	AF	DS	N	C	HDD harness plate	HDD ﾊｰﾈｽ板
3	LPLTM6600FCZZ	AF	DS	N	C	HDD fixing plate	HDD 取付板
4	DUNT-7388FCPZ	CD	TR	N	E	HDD	HDD
5	DHAi-3749FCZ1	AT	FG	N	C	HDD IDE harness	HDD IDE ﾊｰﾈｽ
6	DHAi-3750FCZZ	AR	EQ	N	C	HDD power harness	HDD PWR ﾊｰﾈｽ
7	PCUSG0378FCZZ	AF	DS		C	Cushion	ｿﾌﾄｴﾗｽﾄﾏｰ
8	LX-BZ1022LCZZ	AB	DD	N	C	Screw	ﾋﾞｽ
9	LX-BZ1057FCZZ	AC	DD	N	C	HDD fixing step screw	HDD 固定段ﾋﾞｽ
10	LHLDW1600FCZZ	AC	DJ		C	Cable saddle	ｹｰﾌﾞﾙｻﾄﾞﾙ
11	PCOVP1946FCZZ	AE	DS	N	B	HDD cover	HDD ｶﾊﾞｰ
13	XHBS730P06000	AC	DD		C	Screw(3×6)	ﾋﾞｽ
14	XBBS730P06000	AC	DD		C	Screw(3×6)	ﾋﾞｽ
15	LX-BZ0986FCZ1	AF	DS		C	RIC fixing screw	RIC 固定ﾋﾞｽ
16	JHNDM0170FCZ1	AD	DJ		C	Controller handle	ｺﾝﾄﾛｰﾗｰ取手
17	LX-WZ0096FCZZ	AA	DD		C	Washer	ﾜｯｼｬｰ
18	TLABZ5149FCZZ	AC	DJ	N	D	Interface label	ｲﾝﾀｰﾌｪｲｽﾗﾍﾞﾙ
19	RH-iX0018FCPZ	CA	TR	N	B	Memory(512M)	ﾒﾓﾘｰ
20	RH-iX0017FCPZ	BS	MW	N	B	Memory(256M)	ﾒﾓﾘｰ
21	RH-iX0017FCPZ	BS	MW	N	B	Memory(256M) [MX-2300G/FG,MX-2700G/FG]	ﾒﾓﾘｰ
	RH-iX0018FCPZ	CA	TR	N	B	Memory(512M) [MX-2300N,MX-2700N]	ﾒﾓﾘｰ
22	VHi28F642L02F	BF	GN	N	B	BOOT flash ROM [MX-2300G/FG/N]	BOOT ﾌﾗｯｼｭﾛﾑ
	VHi28F642L04F	BF	GN	N	B	BOOT flash ROM [MX-2700G/FG/N]	BOOT ﾌﾗｯｼｭﾛﾑ
23	VHi28F642L03F	BF	GN	N	B	Program flash ROM [MX-2300G/FG/N]	ﾌﾟﾛｸﾞﾗﾑﾌﾗｯｼｭﾛﾑ
	VHi28F642L05F	BF	GN	N	B	Program flash ROM [MX-2700G/FG/N]	ﾌﾟﾛｸﾞﾗﾑﾌﾗｯｼｭﾛﾑ
24	XBBS740P08000	AA	DD		C	Screw(4×8)	ﾋﾞｽ

42 ｺﾝﾄﾛｰﾙ BOX 1(Controll BOX 1)

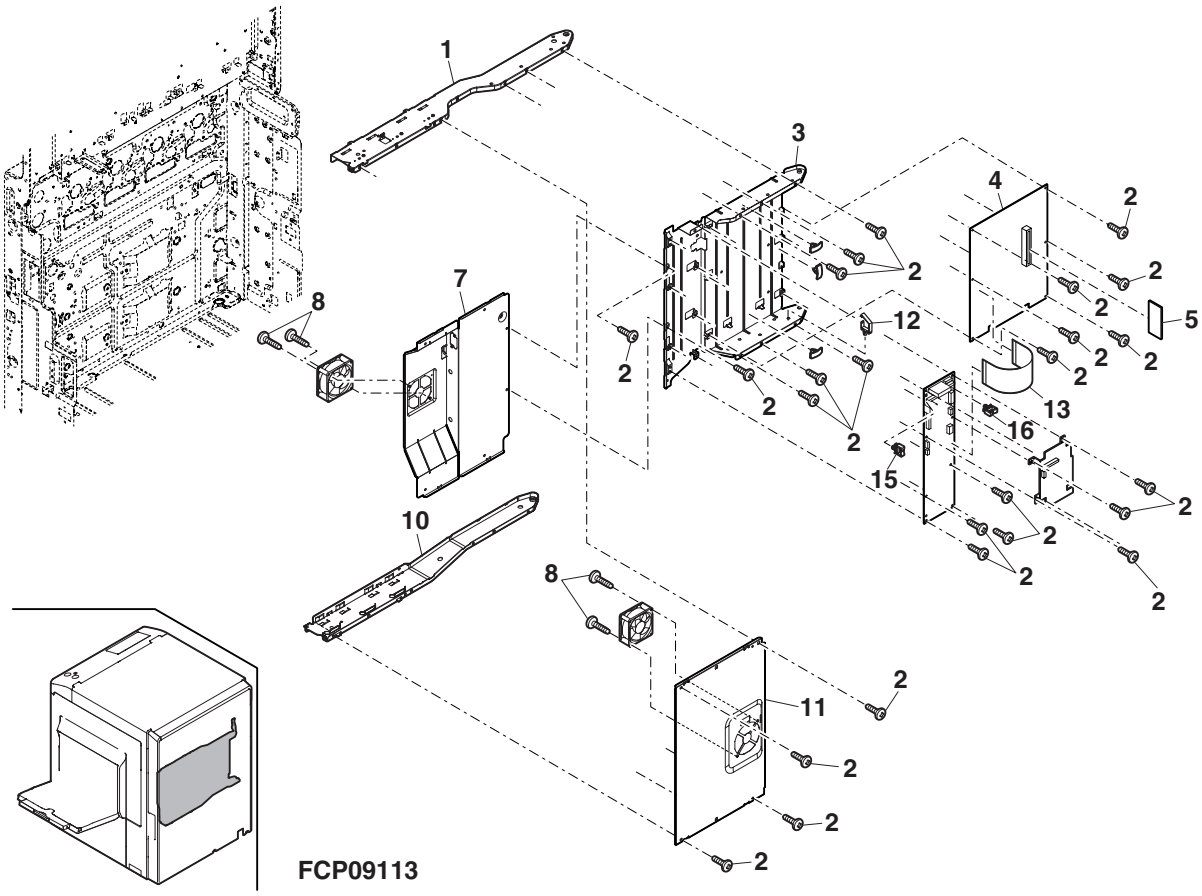

43 ｺﾝﾄﾛｰﾙ BOX 2(Controll BOX 2)

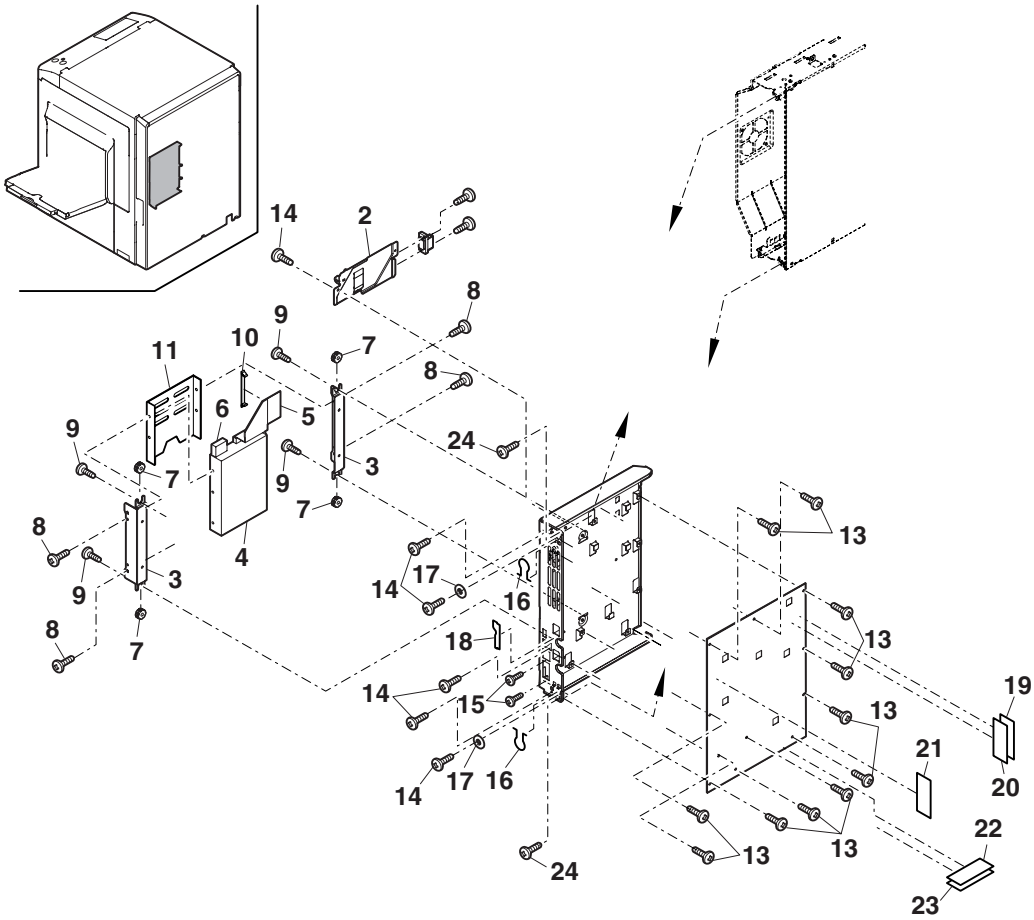

44 電源ﾕﾆｯﾄ (Power supply unit)

NO.	PARTS CODE	PRICE RANK Ex.	PRICE RANK Ja.	NEW MARK	PART RANK	DESCRIPTION	
1	LPLTM6594FCZZ	AL	EB	N	C	AC PWB fixing plate	AC 基板取付板
2	LX-WZ0443FCPZ	AB	DD	N	C	Washer	ﾜｯｼｬｰ
3	XBPS740P06K00	AA	DD		C	Screw(4×6K)	ﾋﾞｽ
4	XHBS730P08000	AB	DD		C	Screw(3×8)	ﾋﾞｽ
5	LHLDW7005SCZZ	AB	DD		C	Wire holder(LWS-2Y)	ﾜｲﾔｰﾎﾙﾀﾞｰ
6	LFiX-0016FCZZ	AD	DJ		C	AC cord fixer (Japan)	AC ｺｰﾄﾞ押え
	LFiX-0084FCZZ	AD	DJ		C	AC cord fixer (U.S.A,Canada)	AC ｺｰﾄﾞ押え
7	XHBS740P08000	AA	DD		C	Screw(4×8)	ﾋﾞｽ
8	XBPS740P25XS0	AB	DD		C	Screw(4×25XS)	ﾋﾞｽ
9	DHAi-3756FCZZ	AE	DJ	N	C	AC/WH harness 2 (Japan)	AC/WH ﾊｰﾈｽ 2
10	XBPS740P08K00	AA	DD		C	Screw(4×8K)	ﾋﾞｽ
11	CPWBF1663FC31	BD	GN	N	E	AC PWB (Japan)	AC 基板
	CPWBF1664FC31	BF	GN	N	E	AC PWB (100V Series except Japan)	AC 基板
	CPWBF1665FC31	BE	GN	N	E	AC PWB (200V Series)	AC 基板
12	XHBS730P30000	AB	DD	N	C	Screw(3×30)	ﾋﾞｽ
14	LSUPP0118FCZZ	AB	DJ		C	PWB supporter (Japan)	基板ｻﾎﾟｰﾀｰ
15	CPWBF1675FC31	AT	EZ	N	E	WH PWB (Japan)	WH 基板
16	DHAi-3755FCZZ	AH	DX	N	C	AC/WH harness 1 (Japan)	AC/WH ﾊｰﾈｽ 1
17	LPLTM6590FCZZ	AQ	EQ	N	C	PS PWB fixing plate	PS 基板取付板
18	LHLDW1264FCZZ	AD	DJ		C	Wire saddle(LWS-8S-2.5W)	ﾜｲﾔｰｻﾄﾞﾙ
19	LHLDW1155FCZZ	AC	DJ		C	Wire saddle(LWS3S2W)	ﾜｲﾔｰｻﾄﾞﾙ
21	XBPS730P08K00	AA	DD		C	Screw(3×8K)	ﾋﾞｽ
22	LHLDW7027SCZZ	AB	DD		C	Wire saddle(LSW-2H)	ﾜｲﾔｰｻﾄﾞﾙ
⚠ 23	QACCD7713QCPZ	AT	EZ	N	B	AC cord (U.S.A,Canada,Saudi Arabia)	AC ｺｰﾄﾞ
⚠	QACCJ6413QCPA	AY	FQ	N	B	AC cord (Japan)	AC ｺｰﾄﾞ
⚠	QACCB7623QCZZ	AQ	EQ		B	AC cord (U.Kingdom,Yemen,Bahrain,Kuwait,Oman)	AC ｺｰﾄﾞ
⚠	QACCVR621QCPZ	AQ	FQ		B	AC cord (Europe except U.Kingdom)	AC ｺｰﾄﾞ
⚠	QACCLR624QCPZ	BA	FX		B	AC cord (Australia,New zealand)	AC ｺｰﾄﾞ
⚠	QACCJ6912QCPZ	AV	FG		B	AC cord (Philippines)	AC ｺｰﾄﾞ
⚠	QACCB9521QCZZ	AW	FG		B	AC cord (Singapole,Maraysia, Hong Kong,India,South Africa)	AC ｺｰﾄﾞ
⚠	QACCVR621QCPZ	AQ	FQ		B	AC cord (Algeria,Tunisia,West Africa,Lebanon, Iran,Morocco,Egypt,Indonesia,Thailand)	AC ｺｰﾄﾞ
24	LHLDW1154FCZZ	AC	DJ		C	Wire saddle(LWS5S2W)	ﾜｲﾔｰｻﾄﾞﾙ
25	LHLDW1334FCZZ	AA	DJ		C	Wire holder (Japan)	ｵﾒｶﾞﾛｯｸ
26	DHAi-3699FCZ1	AG	DX	N	C	AC-DCWH harness	AC-DCWH ﾊｰﾈｽ
27	DHAi-3771FCZZ	AL	EB	N	C	Reactor harness (200V Series)	ﾘｱｸﾄﾙﾊｰﾈｽ

44 電源ﾕﾆｯﾄ (Power supply unit)

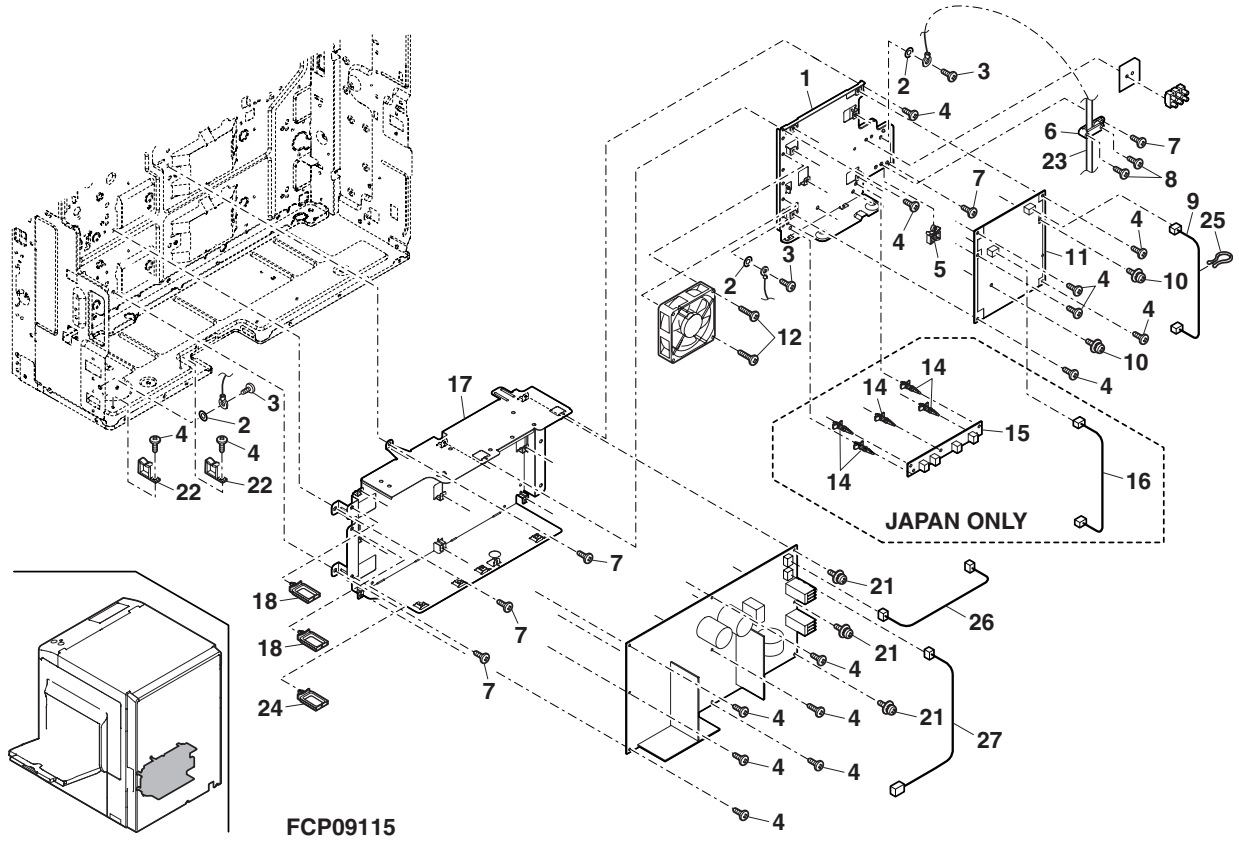

45 前ﾌﾚｰﾑ部 (Front frame section)

NO.	PARTS CODE	PRICE RANK Ex.	PRICE RANK Ja.	NEW MARK	PART RANK	DESCRIPTION	
1	LRALM0234FCZZ	BA	FX	N	C	Slide rail	ｽﾗｲﾄﾞﾚｰﾙ
2	XHBS740P08000	AA	DD		C	Screw(4×8)	ﾋﾞｽ
3	PCOVP1883FCZZ	AC	DJ	N	C	Handle cover	取手ｶﾊﾞｰ
4	XEBS730P08000	AC	DD		C	Screw(3×8)	ﾋﾞｽ
5	LPLTM6543FCZZ	AD	DJ		C	Handle fixing plate	取手固定板
6	JHNDM0185FCZZ	AG	DX	N	C	Handle	取手
7	QSW-C9295QCZZ	AL	EB		B	Main switch(ALP SDDJF3)	ﾒｲﾝｽｲｯﾁ
8	LPLTM6596FCZZ	AD	DJ	N	C	Main switch fixing plate	ﾒｲﾝｽｲｯﾁ取付板
9	LHLDW7008XCZZ	AB	DD		C	Wire saddle(LWS-1S)	ﾜｲﾔｻﾄﾞﾙ
10	LPLTM6530FCZZ	AD	DJ	N	C	Paper feed UN fixing plate	給紙 UN 取付板
11	GLEGG0079FCZZ	AE	DJ	N	D	Rubber foot	ｺﾞﾑ足
12	LX-BZ1013FCZZ	AC	DD	N	C	Rubber foot fixing screw	ｺﾞﾑ足固定ﾋﾞｽ
16	XPSSJ20-08000	AA	DD		C	Spring pin	ｽﾌﾟﾘﾝｸﾞﾋﾟﾝ
17	NSFTZ2919FCZZ	AQ	EQ	N	C	Waste toner detect shaft	廃ﾄﾅｰ検知軸
18	NCPL-0076FCZZ	AC	DJ	N	C	Waste toner drive coupling	廃ﾄﾅｰ駆動ｶｯﾌﾟﾘﾝｸﾞ
19	NGERH1654FCZZ	AD	DJ	N	C	Waste toner detect gear(20T)	廃ﾄﾅｰ検知ｷﾞﾔ
20	MSPRC3362FCZZ	AC	DJ	N	C	Load detect spring	負荷検知ｽﾌﾟﾘﾝｸﾞ
21	LX-BZ0850FCPZ	AC	DD	N	C	Drawer connector step screw	ﾄﾞﾛｱｺﾈｸﾀｰ段ﾋﾞｽ
22	MLEVP0936FCZZ	AB	DJ	N	C	Waste toner detect lever	廃ﾄﾅｰ検知ﾚﾊﾞｰ
23	NBRGM0096FCZ1	AC	DJ		C	Bearing	軸受
24	LPLTM6569FCZZ	AG	DS	N	C	Waste toner drive fixing plate	廃ﾄﾅｰ駆動取付板
25	RMOTD0931FCPZ	AZ	FQ	N	B	Waste toner motor	廃ﾄﾅｰﾓｰﾀｰ
26	XBPS730P08KS0	AB	DD		C	Screw(3×8KS)	ﾋﾞｽ
27	XRESP50-06000	AA	DD		C	E ring(E5)	E ﾘﾝｸﾞ
28	NGERH1633FCZZ	AC	DJ	N	C	Waste toner drive gear(20T)	廃ﾄﾅｰ駆動ｷﾞﾔ
29	QSW-B0017QSZZ	AF	DS		B	Waste toner full detect switch(D2X-G)	廃ﾄﾅｰ満杯検知ｽｲｯﾁ
30	MLEVP0965FCZZ	AC	DJ	N	C	Waste toner box existence lever	廃ﾄﾅｰﾎﾞｯｸｽ有無ﾚﾊﾞｰ
33	MSPRT3454FCZZ	AB	DJ	N	C	Detect lever movable spring	検知ﾚﾊﾞｰ可動ｽﾌﾟﾘﾝｸﾞ
34	XHBS730P06000	AC	DD		C	Screw(3×6)	ﾋﾞｽ
501	CPLTM6569DS51	AY	FQ	N	E	Waste toner drive unit	廃ﾄﾅｰ駆動ﾕﾆｯﾄ

45 前ﾌﾚｰﾑ部 (Front frame section)

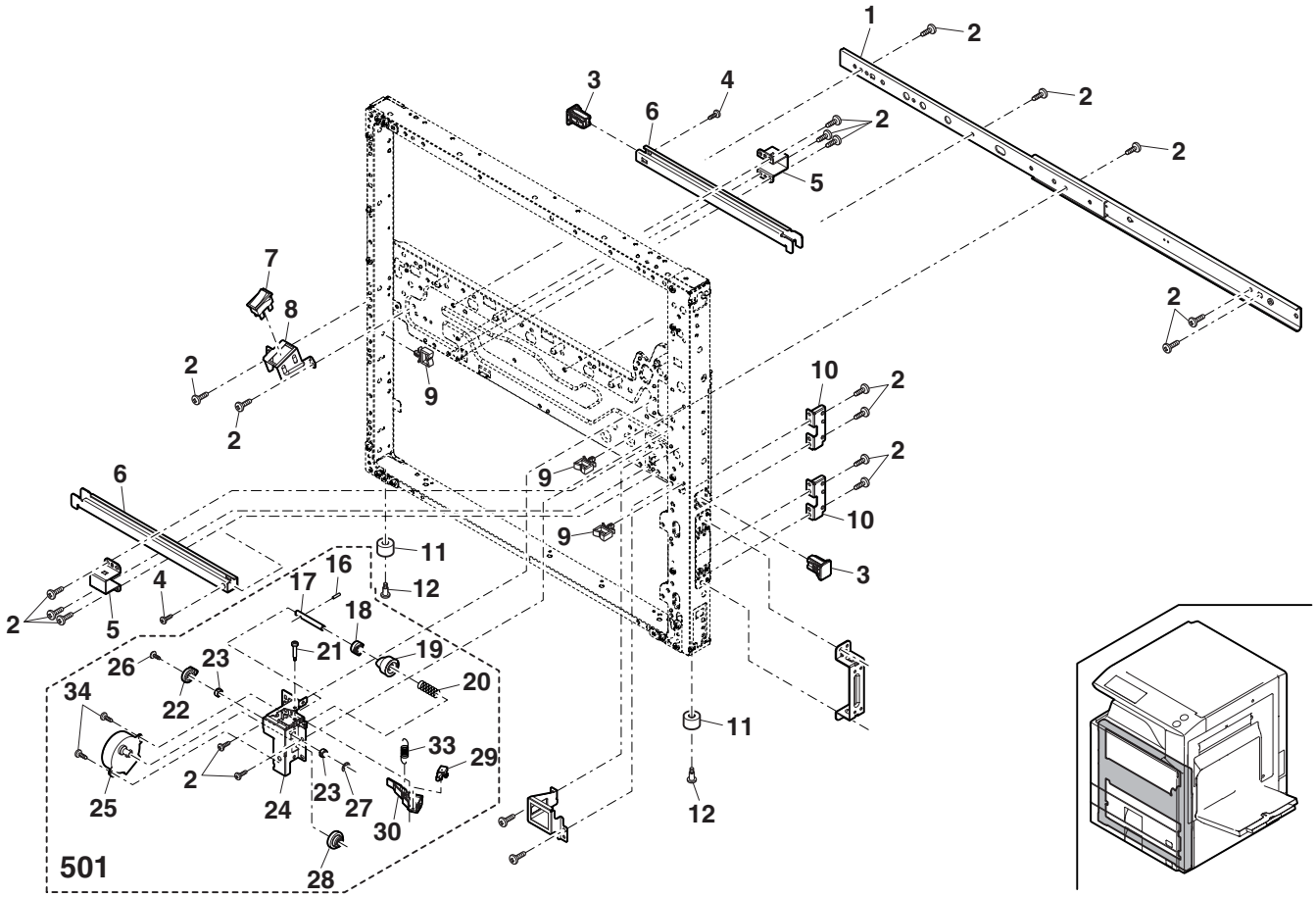

FCP09116

46 後ﾌﾚｰﾑ部 1(Rear frame section 1)

NO.	PARTS CODE	PRICE RANK Ex.	PRICE RANK Ja.	NEW MARK	PART RANK	DESCRIPTION	
1	LHLDZ1652FCZZ	AF	DS	N	C	1st TC electrolde holder	1st TC 電極ﾎﾙﾀﾞｰ
2	XHBS740P08000	AA	DD		C	Screw(4×8)	ﾋﾞｽ
4	QSLP-0216FCZZ	AC	DJ	N	B	1st TC electrolde	1st TC 電極
5	XEBS730P08000	AC	DD		C	Screw(3×8)	ﾋﾞｽ
6	RPLU-0368FCZZ	AT	EZ	N	B	Solenoid CL	ｿﾚﾉｲﾄﾞ CL
7	MLNKP0035FCZZ	AC	DJ	N	C	Shutter link	ｼｬｯﾀｰﾘﾝｸ
8	XBBS730P06000	AC	DD		C	Screw(3×6)	ﾋﾞｽ
9	CHLDZ1660FC01	AG	DX	N	C	Shutter drive holder	ｼｬｯﾀｰ駆動ﾎﾙﾀﾞｰ
10	CPWBF1676FC31	AQ	EQ	N	E	Discharger lamp PWB	除電ﾗﾝﾌﾟ基板
11	PFTAP0149FCZZ	AG	DS	N	C	Process electrode cover	ﾌﾟﾛｾｽ電極ﾌﾀ
12	MSPRD3385FCZZ	AD	DJ	N	C	GB contact spring	GB 接点ｽﾌﾟﾘﾝｸﾞ
13	MSPRD3386FCZZ	AD	DJ	N	C	DV contact spring	DV 接点ｽﾌﾟﾘﾝｸﾞ
14	MSPRD3384FCZZ	AC	DJ	N	C	MC contact spring	MC 接点ｽﾌﾟﾘﾝｸﾞ
15	PCASZ0312FCZZ	AG	DX	N	C	Prosess electorde case	ﾌﾟﾛｾｽ電極ｹｰｽ
17	DHAi-3710FCZZ	AQ	EQ		C	DV interface harness	DV 中継ﾊｰﾈｽ
18	QSLP-0208FCZZ	AD	DJ	N	B	MC connect plug	MC 接続端子
21	GLEGG0079FCZZ	AE	DJ	N	D	Rubber foot	ｺﾞﾑ足
22	LX-BZ1013FCZZ	AC	DD	N	C	Rubber foot fixing screw	ｺﾞﾑ足固定ﾋﾞｽ
23	MLOKZ0011FCZZ	AC	DJ	N	C	Cassette lock	ｶｾｯﾄﾛｯｸ
24	VHPGP1S73P+-1	AF	DS		B	Sensor(GP1S73P)	ｾﾝｻｰ
25	XBPS740P10KS0	AC	DD		C	Screw(4×10KS)	ﾋﾞｽ
26	NBLTH0455FCZZ	AQ	EQ	N	B	Motor reduction belt	ﾓｰﾀｰ減速ﾍﾞﾙﾄ
27	NSFTZ2952FCZZ	AL	EB	N	C	ADU drive joint shaft	ADU 駆動連結軸
28	PCLR-0509FCZZ	AC	DJ	N	C	Joint collar(22)	連結ｶﾗｰ
29	NGERH1471FCZZ	AF	DS		C	M transport gear(22T)	M 搬送ｷﾞｬ
30	MARMP0343FCZZ	AC	DJ	N	C	ADU drive joint arm	ADU 駆動連結ｱｰﾑ
31	XRESP40-06000	AA	DD		C	E ring(E4)	E ﾘﾝｸﾞ
32	MSPRT3438FCZZ	AA	DJ	N	C	Joint arm spring	連結ｱｰﾑｽﾌﾟﾘﾝｸﾞ
33	LFRM-1193FCZZ	AF	DS	N	C	Right drive frame	右ﾄﾞｱ駆動ﾌﾚｰﾑ
34	XBPS730P08KS0	AB	DD		C	Screw(3×8KS)	ﾋﾞｽ
35	NPLYZ0440FCZZ	AC	DJ	N	C	Pulley(36P)	ﾌﾟｰﾘｰ
36	NGERH1617FCZZ	AC	DJ	N	C	ADU joint gear(28T)	ADU 連結ｷﾞｬ
37	NSFTZ2960FCZZ	AL	EB	N	C	Right drive shaft	右ﾄﾞｱ駆動軸
38	LX-BZ1046FCZZ	AC	DD		C	Drawer connector step screw	ﾄﾞﾛｱｺﾈｸﾀｰ段ﾋﾞｽ
39	LPLTM5714FCZZ	AB	DJ		C	M3 plate	M3 ﾌﾟﾚｰﾄ
40	LHLDZ1653FCZZ	AL	EB	N	C	2nd TC separate electrode holder	2nd TC 剥離電極ﾎﾙﾀﾞｰ
41	QSLP-0212FCZZ	AC	DJ	N	B	2nd TC separate electrode	2nd TC 剥離電極
42	QSW-M0502FCPZ	AH	DX	N	B	Inter lock switch(AM51632C531)	ｲﾝﾀｰﾛｯｸｽｲｯﾁ
43	XEBS730P16000	AA	DD		C	Screw(3×16)	ﾋﾞｽ
44	XEBS730P08000	AC	DD		C	Screw(3×8)	ﾋﾞｽ
45	PCOVP1893FCZZ	AE	DJ	N	C	Inter lock switch cover	ｲﾝﾀｰﾛｯｸｽｲｯﾁｶﾊﾞｰ
46	MSPRD3424FCZ1	AC	DJ		C	Joint spring	連結ｽﾌﾟﾘﾝｸﾞ
47	NSFTZ2942FCZZ	BQ	LP	N	C	Joint shaft	連結軸
48	LFRM-1192FCZZ	AD	DJ	N	C	Drive joint frame	駆動連結ﾌﾚｰﾑ
49	NSFTZ2948FCZZ	AF	DS	N	C	Movable joint shaft	可動連結軸
50	NGERH1629FCZZ	AC	DJ	N	C	Paper feed gear(24T)	給紙ｷﾞｬ
51	XRESP40-06000	AA	DD		C	E ring(E4)	E ﾘﾝｸﾞ
52	NGERH1617FCZZ	AC	DJ	N	C	ADU joint gear(28T)	ADU 連結ｷﾞｬ
53	VHPGP1A71L3-1	AG	DS		B	Remain detect sensor	残量検知ｾﾝｻｰ
54	PCOVP1863FCZZ	AD	DJ	N	C	Remain detect cover	残量検知ｶﾊﾞｰ
55	CPWBF1598FCE1	AG	DX		E	Cassette existence detect PWB	ｶｾｯﾄ有無検知基板
56	MSPRC2894FCZZ	AC	DJ		C	Vertical detect switch spring	縦検知ｽｲｯﾁｽﾌﾟﾘﾝｸﾞ
57	LHLDZ1464FCZZ	AG	DX		C	Vertical detect spring holder	縦検知ﾊﾞﾈﾎﾙﾀﾞｰ
58	PCOVP1838FCZZ	AE	DJ	N	C	Cassette detect cover	ｶｾｯﾄ検知ｶﾊﾞｰ
59	XEBS740P08000	AA	DD		C	Screw(4×8)	ﾋﾞｽ
60	DHAi-3725FCZZ	AG	DS	N	C	MC harness	MC ﾊｰﾈｽ
61	DHAi-3726FCZZ	AE	DS	N	C	MC interface harness	MC 中継ﾊｰﾈｽ
62	DHAi-3832FCZ1	AG	DS	N	C	MC BK harness	MC BK ﾊｰﾈｽ
63	DHAi-3721FCZZ	AD	DJ	N	C	Transfer belt separate harness	転写ﾍﾞﾙﾄ剥離ﾊｰﾈｽ
65	LX-BZ0987FCZZ	AC	DD		C	Heater fixing screw	ﾋｰﾀｰ取付ﾋﾞｽ
501	CFRM-1193DS51	AQ	EQ	N	E	ADU joint drive	ADU 連結駆動

46 後フレーム部 1(Rear frame section 1)

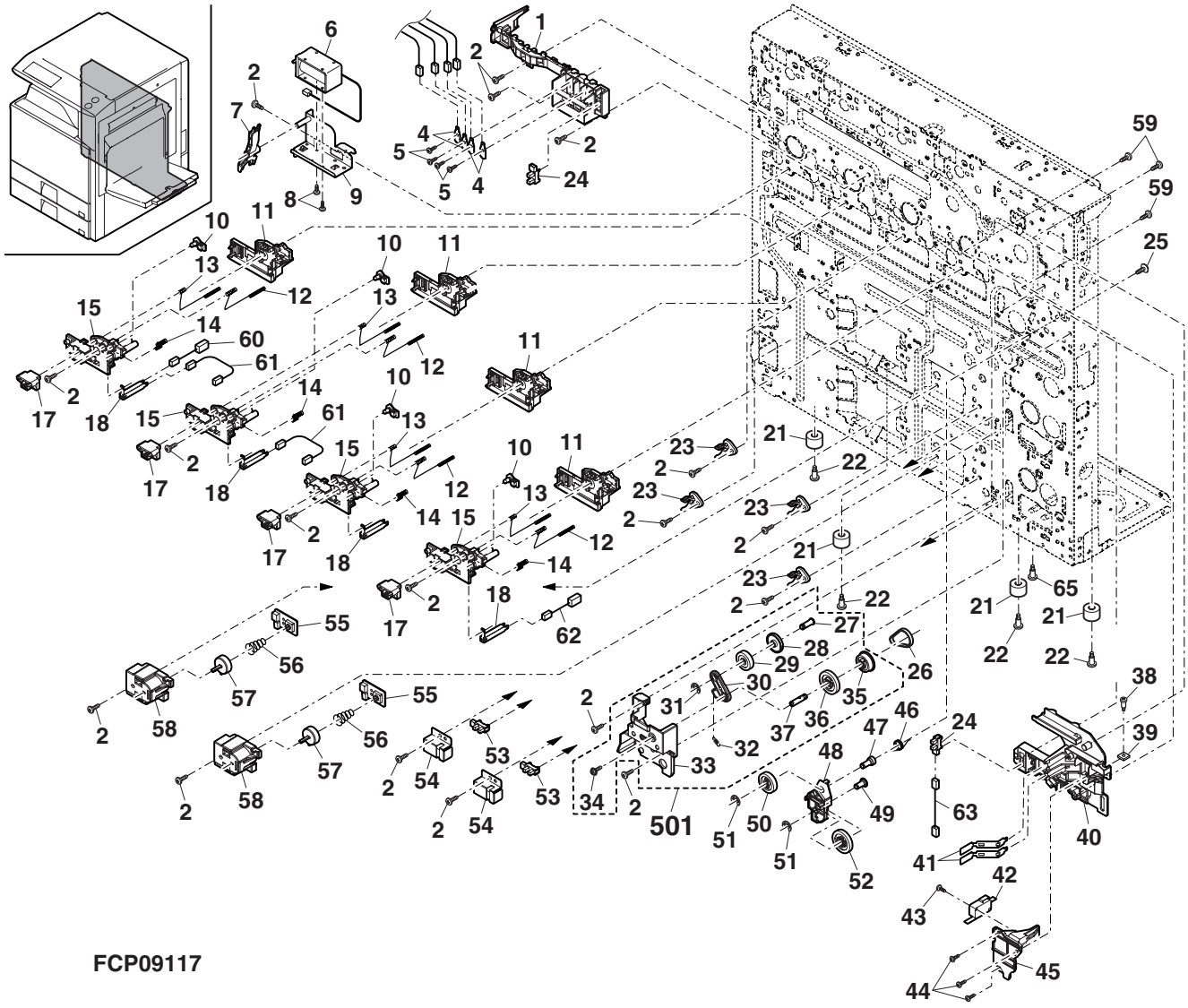

47 後フレーム部 2(Rear frame section 2)

NO.	PARTS CODE	PRICE RANK Ex.	PRICE RANK Ja.	NEW MARK	PART RANK	DESCRIPTION	
1	LPLTM6583FCZZ	AG	DS		C	Exterior fixing plate L	外装取付板 L
2	XHBS740P08000	AA	DD		C	Screw(4×8)	ﾋﾞｽ
3	LHLDZ1681FCZZ	AG	DX	N	C	Harness holder	ﾊｰﾈｽﾎﾙﾀﾞｰ
4	LPLTM6606FCZZ	AP	EQ	N	C	HL 2nd TC PWB fixing plate	HL 2nd TC 基板取付板
5	CPWBF1666FC31	BG	GT	N	E	HL PWB (100V Series)	HL 基板
	CPWBF1667FC31	BH	GX	N	E	HL PWB (200V Series)	HL 基板
6	XHBS730P08000	AB	DD		C	Screw(3×8)	ﾋﾞｽ
8	LHLDW1264FCZZ	AD	DJ		C	Wire saddle(LWS-8S-2.5W)	ﾜｲﾔｰｻﾄﾞﾙ
10	LPLTM6584FCZZ	AD	DJ		C	Box fixing plate	ﾎﾞｯｸｽ取付板
11	LPLTM6593FCZZ	AF	DS	N	C	Transfer high voltage fixing plate	転写高圧取付板
13	QSW-C9294QCZZ	AF	DS		B	Dehumidification heater switch (Japan)	除湿ﾋｰﾀｰｽｲｯﾁ
14	PMLT-1426FCZZ	AC	DJ	N	C	Ozon duct cushion B	ｵｿﾞﾝﾀﾞｸﾄﾓﾙﾄ B
15	JHNDM0185FCZZ	AG	DX	N	C	Handle	取手
16	PCOVP1883FCZZ	AC	DJ	N	C	Handle cover	取手ｶﾊﾞｰ
17	XEBS730P08000	AC	DD		C	Screw(3×8)	ﾋﾞｽ
18	LPLTM6543FCZZ	AD	DJ		C	Handle fixing plate	取手固定板
19	LRALM0234FCZZ	BA	FX	N	C	Slide rail P	ｽﾗｲﾄﾞﾚｰﾙ P
20	XBBS740P06000	AA	DD		C	Screw(4×6)	ﾋﾞｽ
21	LPLTM6603FCZZ	AG	DS	N	C	Shield fixing plate	ｼｰﾙﾄﾞ取付板
22	RSPA00001QSZZ	AH	DX		B	Speaker [MX-2300FG,MX-2700FG]	ｽﾋﾟｰｶｰ
23	LX-HZ0002QSPZ	AC	DD		C	Step screw [MX-2300FG,MX-2700FG]	段ﾋﾞｽ
25	XHBS730P06000	AC	DD		C	Screw(3×6)	ﾋﾞｽ
26	LBNDJ0020FCZZ	AA	DD		C	Snap band [MX-2300FG,MX-2700FG]	ｽﾅｯﾌﾟﾊﾞﾝﾄﾞ
27	LX-BZ0932FCPZ	AC	DD	N	C	Drawer step screw	ﾄﾞﾛｱ段ﾋﾞｽ
28	MSPRC3267FCZ1	AC	DJ		C	Right drawer spring	右ﾄﾞｱﾄﾞﾛｱｽﾌﾟﾘﾝｸﾞ
29	LPLTM6589FCZZ	AE	DS		C	Right drawer fixing plate	右ﾄﾞｱﾄﾞﾛｱ取付板
30	DHAi-3715FCZ2	BG	GT	N	C	Paper feed main harness	給紙ﾒｲﾝﾊｰﾈｽ
31	PDUC-0187FCZZ	AQ	EQ	N	C	Ozon inhalation duct B	ｵｿﾞﾝ吸気ﾀﾞｸﾄ B
32	PDUC-0186FCZZ	AS	EQ	N	C	Ozon inhalation duct A	ｵｿﾞﾝ吸気ﾀﾞｸﾄ A
34	PDUC-0188FCZZ	AM	EG	N	C	Ozon inhalation duct C	ｵｿﾞﾝ吸気ﾀﾞｸﾄ C
35	LPLTM6585FCZZ	AL	EB	N	C	Exterior fixing plate L lower	外装取付板 L 下
37	XEBS740P40000	AC	DD		C	Screw(4×40)	ﾋﾞｽ
38	NFANS0079FCPZ	BC	GD	N	B	Ozon fan	ｵｿﾞﾝﾌｧﾝ
39	PBOX-0152FCZZ	AK	EB	N	D	Filter box	ﾌｨﾙﾀｰﾎﾞｯｸｽ
40	PFiLZ0308FCZZ	AZ	FQ	N	A	Ozon filter	ｵｿﾞﾝﾌｨﾙﾀｰ
41	LPLTM6591FCZZ	AG	DX		C	Driver PWB fixing plate	ﾄﾞﾗｲﾊﾞｰ基板取付板
45	LPLTM6601FCZZ	AM	EG		C	FAX PWB fixing plate [MX-2300FG,MX-2700FG]	FAX 基板取付板
48	XBPS730P08KS0	AB	DD		C	Screw(3×8KS) [MX-2300FG,MX-2700FG]	ﾋﾞｽ
49	PCOVP1885FCZZ	AK	DX	N	C	FAX cover [MX-2300FG,MX-2700FG]	FAX ｶﾊﾞｰ
52	XBPS726P08000	AA	DD		C	Screw(2.6×8) [MX-2300FG,MX-2700FG]	ﾋﾞｽ
53	PSHEP5458FCZZ	AD	DJ	N	C	Duct harness sheet	ﾀﾞｸﾄﾊｰﾈｽｼｰﾄ
54	PSEL-0936FCZZ	AC	DJ	N	C	Ozon duct seal	ｵｿﾞﾝﾀﾞｸﾄｼｰﾙ
58	LX-BZ0705FCPZ	AC	DD		C	Screw	ﾋﾞｽ
59	LHLDW1285FCZZ	AC	DJ		C	Edge saddle	ｴｯｼﾞｻﾄﾞﾙ
60	LX-BZ1027FCZZ	AC	DD	N	C	Rail step screw	ﾚｰﾙ用段ﾋﾞｽ
61	CPLTM6981FC01	AG	DX	N	C	Earth spring fixing plate [Except MX-2300FG, MX-2700FG]	ｱｰｽｽﾌﾟﾘﾝｸﾞ取付板
62	PCOVP1933FCZZ	AE	DS	N	C	Duct harness cover	ﾀﾞｸﾄﾊｰﾈｽｶﾊﾞｰ
63	PSHEP5497FCPZ	AC	DJ	N	C	Speaker harness protect sheet [MX-2300FG,MX-2700FG]	ｽﾋﾟｰｶｰﾊｰﾈｽ保護ﾏｲﾗｰ
64	DHAi-3728FCZ1	AF	DS	N	C	2nd transfer separate harness	2 次転写剥離ﾊｰﾈｽ
65	DHAi-3706FCZZ	AE	DS	N	C	HV interface harness	HV 中継ﾊｰﾈｽ

47 後フレーム部 2(Rear frame section 2)

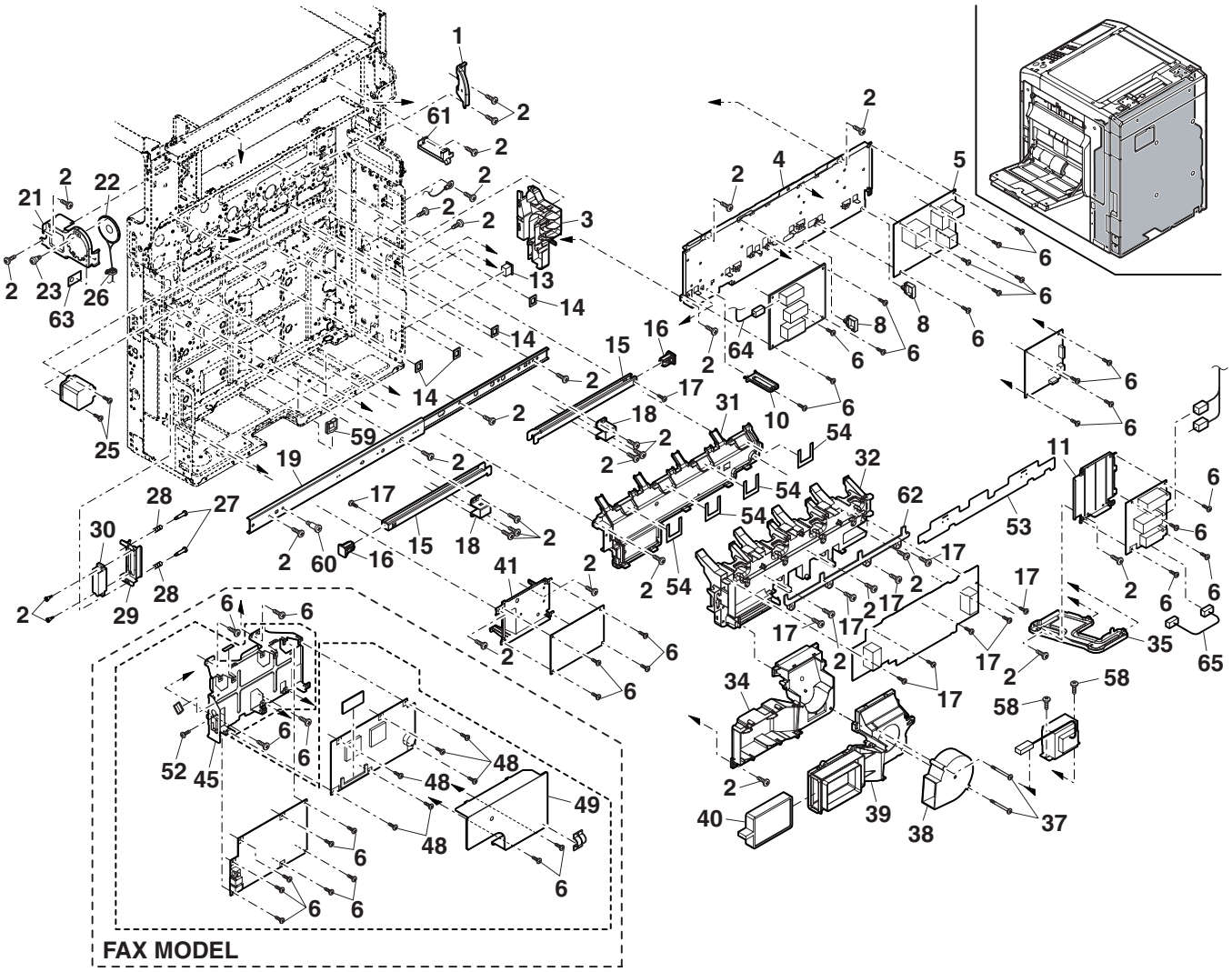

FCP09118

48 ﾌﾚｰﾑ部 1(Frame section 1)

NO.	PARTS CODE	PRICE RANK Ex.	PRICE RANK Ja.	NEW MARK	PART RANK	DESCRIPTION	
1	LFRM-1178FCZZ	AR	EQ	N	C	Frame left rear	ﾌﾚｰﾑ左後
2	PGiDH2161FCZZ	AG	DX	N	C	Harness guide	ﾊｰﾈｽｶﾞｲﾄﾞ
3	XHBS740P08000	AA	DD		C	Screw(4×8)	ﾋﾞｽ
4	LFRM-1189FCZZ	AR	EQ	N	C	Frame right rear	ﾌﾚｰﾑ右後
5	CSTYM0351FC01	AN	EG		C	Scanner stay RR	ｽｷｬﾅｽﾃｲ RR
6	LPLTM6577FCZZ	AG	DS		C	Delivery positioning plate	排紙位置決めﾌﾟﾚｰﾄ
7	LSTYM0355FCZZ	AQ	EQ		C	Delivery stay	排紙ｽﾃｲ
8	LPLTM6604FCZZ	AH	DX	N	C	Exterior reinforce plate	外装補強板
9	CPLTM6541FC01	AY	FQ	N	C	Scanner joint plate L	ｽｷｬﾅ連結板 L
10	LX-BZ0335FCPZ	AB	DD		C	Red screw(4×6S/SW)	赤ﾋﾞｽ
11	LRALM0229FCZZ	AL	EB	N	C	Cassette rail L	ｶｾｯﾄﾚｰﾙ L
12	PCLR-0519FCZZ	AE	DS	N	C	Collar(ϕ16)	ｺﾛ
13	LX-BZ0926FCP1	AC	DD	N	C	Collar step screw	ｺﾛ段ﾋﾞｽ
14	PCASZ0314FCZZ	AY	FQ	N	C	Toner case upper	ﾄﾅｰｹｰｽ上
15	QSW-M0502FCPZ	AH	DX	N	B	Inter lock switch(AM51632C531)	ｲﾝﾀｰﾛｯｸｽｲｯﾁ
16	LPLTM6542FCZZ	AD	DJ	N	C	Scanner adjust plate	ｽｷｬﾅ調整板
17	LPLTM6597FCZ1	AH	DX	N	C	Door switch fixing plate	ﾄﾞｱｽｲｯﾁ取付板
18	LPLTM5714FCZZ	AB	DJ		C	M3 plate	M3 ﾌﾟﾚｰﾄ
19	LRALP0231FCZZ	AM	EG	N	C	Fusing rail F	定着ﾚｰﾙ F
20	LPLTM6575FCZZ	AE	DJ		C	Fusing drawer fixing plate	定着ﾄﾞﾛｱ取付板
21	XEBS740P08000	AA	DD		C	Screw(4×8)	ﾋﾞｽ
22	CSTYM0353FC01	AR	EQ	N	C	Fusing stay	定着ｽﾃｰ
23	LX-BZ0881FCZZ	AC	DD		C	Holder red screw	ﾎﾙﾀﾞｰ用赤ﾋﾞｽ
24	LRALM0230FCZZ	AN	EG	N	C	Cassette rail R	ｶｾｯﾄﾚｰﾙ R
25	LPLTM6580FCZZ	AL	EB	N	C	Transport UN fixing plate	搬送 UN 取付板
26	LX-BZ0959FCPZ	AC	DD	N	C	Step screw(M3)	段ﾋﾞｽ
28	LPLTM6089FCZZ	AK	DX		C	Heater fixing plate (Japan only)	ﾋｰﾀｰ取付板
29	RHETP0133FCP1	AV	FG	N	B	Dehumidification heater (Japan only)	除湿ﾋｰﾀｰ
30	XHBS730P06000	AC	DD		C	Screw(3×6) (Japan only)	ﾋﾞｽ
32	PCASZ0313FCZZ	AV	FG	N	C	Toner case lower	ﾄﾅｰｹｰｽ下
34	LX-BZ1046FCZZ	AC	DD		C	Drawer connector step screw	ﾄﾞﾛｱｺﾈｸﾀ段ﾋﾞｽ
35	CSTYM0350FC01	AQ	EQ		C	Scanner stay FR	ｽｷｬﾅｽﾃｲ FR
37	LHLDW7008XCZZ	AB	DD		C	Wire saddle(LWS-1S)	ﾜｲﾔｻﾄﾞﾙ
38	PCOVP1872FCZZ	AK	DX	N	C	Fusing drawer harness cover	定着ﾄﾞﾛｱﾊｰﾈｽｶﾊﾞｰ
39	XHBS730P14000	AA	DD		C	Screw(3×14)	ﾋﾞｽ
40	LPLTM6532FCZZ	AL	EB		C	Scanner joint rear plate	ｽｷｬﾅ連結後ﾌﾟﾚｰﾄ
41	LRALP0232FCZZ	AF	DS	N	C	Toner cartridge rail A	ﾄﾅｰｶｰﾄﾘｯｼﾞﾚｰﾙ A
42	TCAUH1035FCZZ	AC	DJ		D	High temperature caution label (Japan only)	高温注意ﾗﾍﾞﾙ

49 ﾊｰﾈｽ部 (Wiring)

NO.	PARTS CODE	PRICE RANK Ex.	PRICE RANK Ja.	NEW MARK	PART RANK	DESCRIPTION	
1	DHAi-3705FCZ3	BB	GD	N	C	HL interface harness	HL 中継ﾊｰﾈｽ
2	DHAi-3722FCZ2	AX	FG	N	C	Mother/LSU harness	ﾏｻﾞｰ/LSU ﾊｰﾈｽ
4	DHAi-3770FCZ1	AV	FG	N	C	HDD PS interface harness	HDD 電源中継ﾊｰﾈｽ
5	DHAi-3753FCZ1	AT	EZ	N	C	DL DV main harness	DLDV ﾒｲﾝﾊｰﾈｽ
6	DHAi-3698FCZ1	AN	EG	N	C	AC-HL harness	AC-HL ﾊｰﾈｽ
7	DHAi-3700FCZ2	AZ	FQ	N	C	Upper main harness	上ﾒｲﾝﾊｰﾈｽ
8	DHAi-3724FCZ3	BE	GN	N	C	DC main harness	DC ﾒｲﾝﾊｰﾈｽ
9	DHAi-3697FCZ2	AV	FG	N	C	Main switch harness	ﾒｲﾝｽｲｯﾁﾊｰﾈｽ
10	DHAi-3736FCZ2	AU	EZ	N	C	Cassette switch harness	ｶｾｯﾄ SW ﾊｰﾈｽ
11	DHAi-3757FCZ1	AP	EQ	N	C	WH-DSKLC harness	WH-DSKLC ﾊｰﾈｽ
12	DHAi-3746FCZZ	AM	EG	N	C	SCN-WH harness	SCN-WH ﾊｰﾈｽ
13	DHAi-3562FCZZ	AD	DJ		C	PNC harness	PNC ﾊｰﾈｽ
14	LX-BZ0922FCPZ	AC	DD	N	C	HR drawer step screw	HR ﾄﾞﾛｱ段ﾋﾞｽ
15	LRTNP0015FCPZ	AD	DJ	N	C	Retainer(9pin)	ﾘﾃｰﾅ

48 ﾌﾚｰﾑ部 1(Frame section 1)

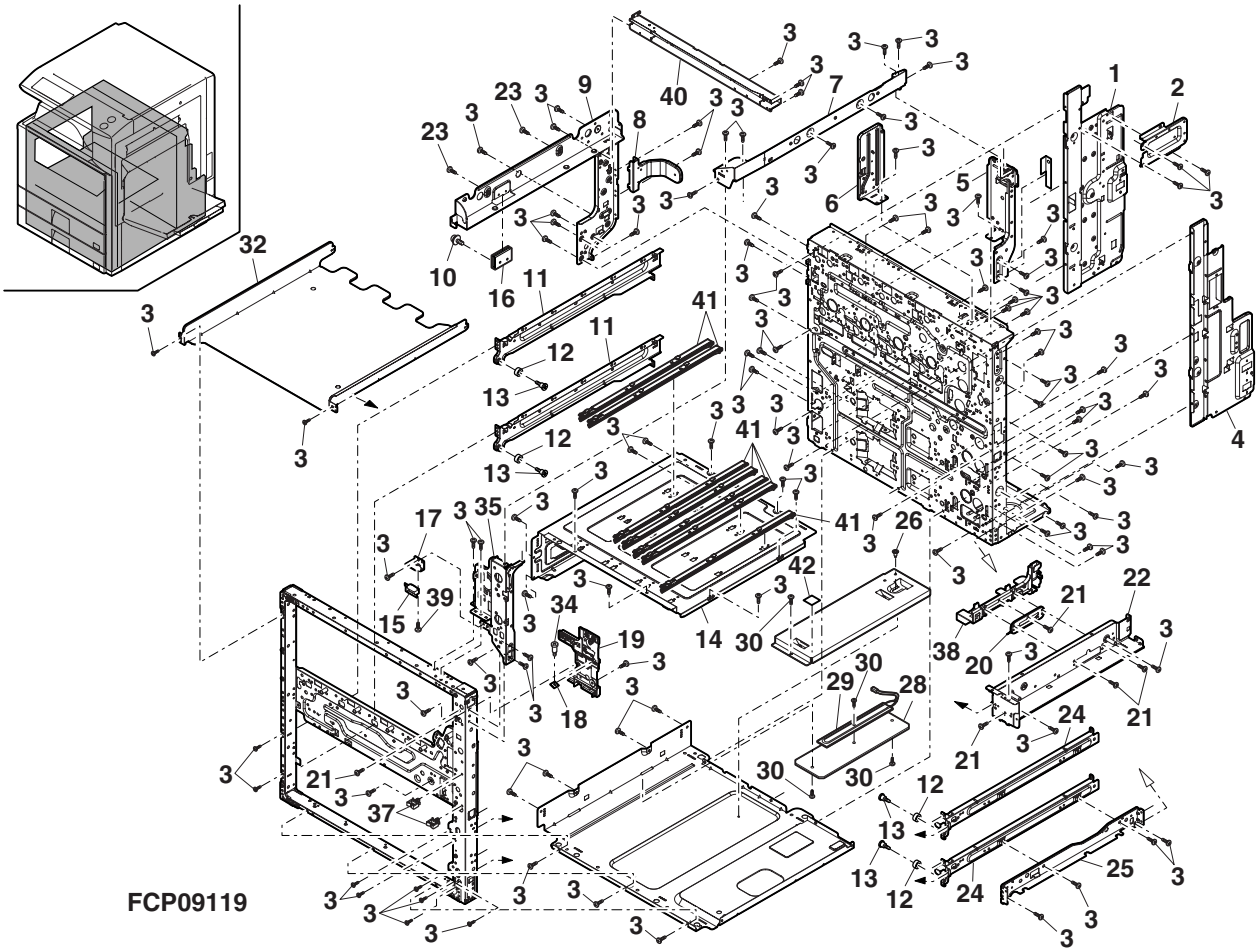

49 ﾊｰﾈｽ部 (Wiring)

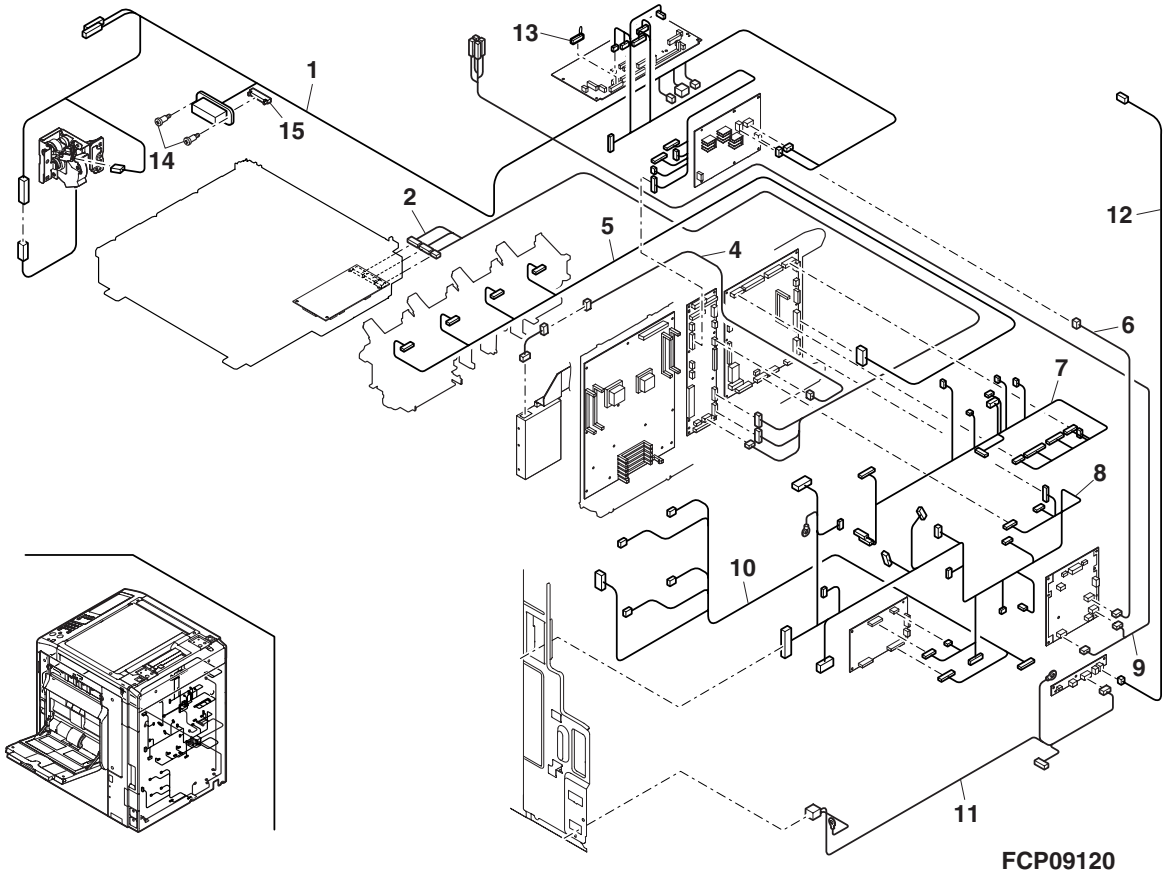

50 RSPF 外装部 (RSPF Exteriors)[MX-2300FG/N,MX-2700FG/N]

NO.	PARTS CODE	PRICE RANK Ex.	PRICE RANK Ja.	NEW MARK	PART RANK	DESCRIPTION	
1	CGiDM2137DS51	BN	LE	N	E	Paper feeding roller unit	給紙ﾛｰﾗｰﾕﾆｯﾄ
2	CSOU-0205DS51	BH	GX	N	E	Original tray unit	原稿ﾄﾚｲﾕﾆｯﾄ
3	GCAB-1107FCZZ	AS	EZ	N	D	RSPF rear cabinet	RSPF 後ｷｬﾋﾞﾈｯﾄ
4	DHAi-3760FCZZ	AN	EQ	N	C	Transport interface main harness	搬送中継ﾒｲﾝﾊｰﾈｽ
5	XEBS740P10000	AA	DD		C	Screw(4×10)	ﾋﾞｽ
6	PSHEZ5374FCZZ	AD	DJ	N	C	OC positioning sheet	OC 位置決めｼｰﾄ
7	XHBS730P06000	AC	DD		C	Screw(3×6)	ﾋﾞｽ
8	XBBS730P16000	AA	DD		C	Screw(3×16)	ﾋﾞｽ
10	DHAi-3759FCZZ	AU	FG	N	C	RSPF connection harness	RSPF 接続ﾊｰﾈｽ
11	LX-BZ1028FCZZ	AC	DD	N	C	Screw	ELCON 段ﾋﾞｽ
12	PCOVP1930FCZZ	AE	DS	N	C	Harness cover lower	ﾊｰﾈｽｶﾊﾞｰ下
13	XNES730-24000	AA	DD		C	Nut(M3)	六角ﾅｯﾄ
15	LSOU-0203FCZ1	BG	GT	N	D	RSPF base tray	RSPF ﾍﾞｰｽﾄﾚｲ
16	LPLTM6553FCZZ	AM	EG		C	Hinge fixing plate	ﾋﾝｼﾞ取付板
17	XEBS740P10000	AA	DD		C	Screw(4×10)	ﾋﾞｽ
20	PCOVP1824FCZZ	AE	DS	N	C	Stamp cover	ｽﾀﾝﾌﾟｶﾊﾞｰ
21	LX-BZ0531FCPZ	AB	DD	N	C	Screw(4×8)	ﾋﾞｽ
22	DHAi-3761FCZZ	AH	DX	N	C	Base tray harness	ﾍﾞｰｽﾄﾚｲﾊｰﾈｽ
23	XEBS730P08000	AC	DD		C	Screw(3×8)	ﾋﾞｽ
24	LHLDZ1540FCZZ	AG	DS		C	Fulcrum holder	支点ﾎﾙﾀﾞｰ
25	XEBS730P10000	AC	DD		C	Screw(3×10)	ﾋﾞｽ
26	PCOVP1855FCZZ	AF	DS	N	C	Sensor cover	ｾﾝｻｰｶﾊﾞｰ
27	CCLEZ0020QS01	AK	EB		D	SPF glass cleaner AS	SPF ｶﾞﾗｽｸﾘｰﾅｰ AS
28	PHAG-0005FCZZ	AC	DJ	N	C	OC mat fixing hook	OC ﾏｯﾄ取付ﾌｯｸ
29	MLEVP0930FCZZ	AC	DJ	N	C	Paper exit actuator	出紙ｱｸﾁｭｴｰﾀｰ
30	MSPRD3375FCZZ	AB	DJ		C	Paper exit return spring	出紙復帰ｽﾌﾟﾘﾝｸﾞ
31	PCOVP1856FCZ1	AE	DS	N	C	Follower roller cover	従動ﾛｰﾗｰｶﾊﾞｰ
32	LPLTM6554FCZZ	AC	DJ		C	Follower roller fixing plate	従動ﾛｰﾗｰ押え板
33	NSFTZ0009QSPZ	AL	EB		C	Transport follower shaft	搬送従動軸
34	NROLP1517FCZZ	AA	DJ	N	C	Delivery follower roller RSPF	排紙従動ﾛｰﾗｰ RSPF
35	PSHEZ5372FCZZ	AE	DJ	N	C	Reading front sheet	読取前ｼｰﾄ
36	VHPGP1A71L3-1	AG	DS		B	Photo sensor(GP1A71L3)	ﾌｫﾄｾﾝｻｰ
38	MSPRC3352FCZZ	AB	DJ		C	Follower pressure spring	従動加圧ｽﾌﾟﾘﾝｸﾞ
39	PMLT-1418FCZZ	AA	DJ	N	C	Gate stopper cushion	ｹﾞｰﾄｽﾄｯﾊﾟｰﾓﾙﾄ
40	XEBS730P08000	AC	DD		C	Screw(3×8)	ﾋﾞｽ
41	NSFTZ2914FCZZ	AP	EQ	N	C	Follower roller shaft	従動ﾛｰﾗｰ軸
42	XRESP30-06000	AA	DD		C	E ring(E3)	E ﾘﾝｸﾞ
43	LHLDZ1640FCZZ	AC	DJ	N	C	Paper feeding PG holder	給紙 PG ﾎﾙﾀﾞｰ
44	LX-BZ0930FCPZ	AC	DD	N	C	Screw(4×6)	ﾋﾞｽ
45	GCAB-1106FCZZ	AN	EG	N	D	RSPF front cabinet	RSPF 前ｷｬﾋﾞﾈｯﾄ
46	GCOV-0249FCZZ	AF	DS	N	D	F cabinet cover	F ｷｬﾋﾞﾈｯﾄｶﾊﾞｰ
47	MSPRT3390FCZZ	AC	DJ		C	Link arm return spring	ﾘﾝｸｱｰﾑ復帰ｽﾌﾟﾘﾝｸﾞ
48	PSHEZ5400FCZ1	AX	FG	N	D	OC mat	OC ﾏｯﾄ
49	XHBS740P08000	AA	DD		C	Screw(4×8)	ﾋﾞｽ
50	MARMP0325FCZZ	AC	DJ	N	C	Upper PG link arm	上 PG ﾘﾝｸｱｰﾑ
51	PCOVP2017FCZZ	AL	EB	N	C	Base lower right cover	ﾍﾞｰｽ右下ｶﾊﾞｰ
501	CSOU-0203DS51	BW	RJ	N	E	Base tray unit(Without No.5,7,27,40,48)	ﾍﾞｰｽﾄﾚｲﾕﾆｯﾄ

50 RSPF 外装部 (RSPF Exteriors)[MX-2300FG/N,MX-2700FG/N]

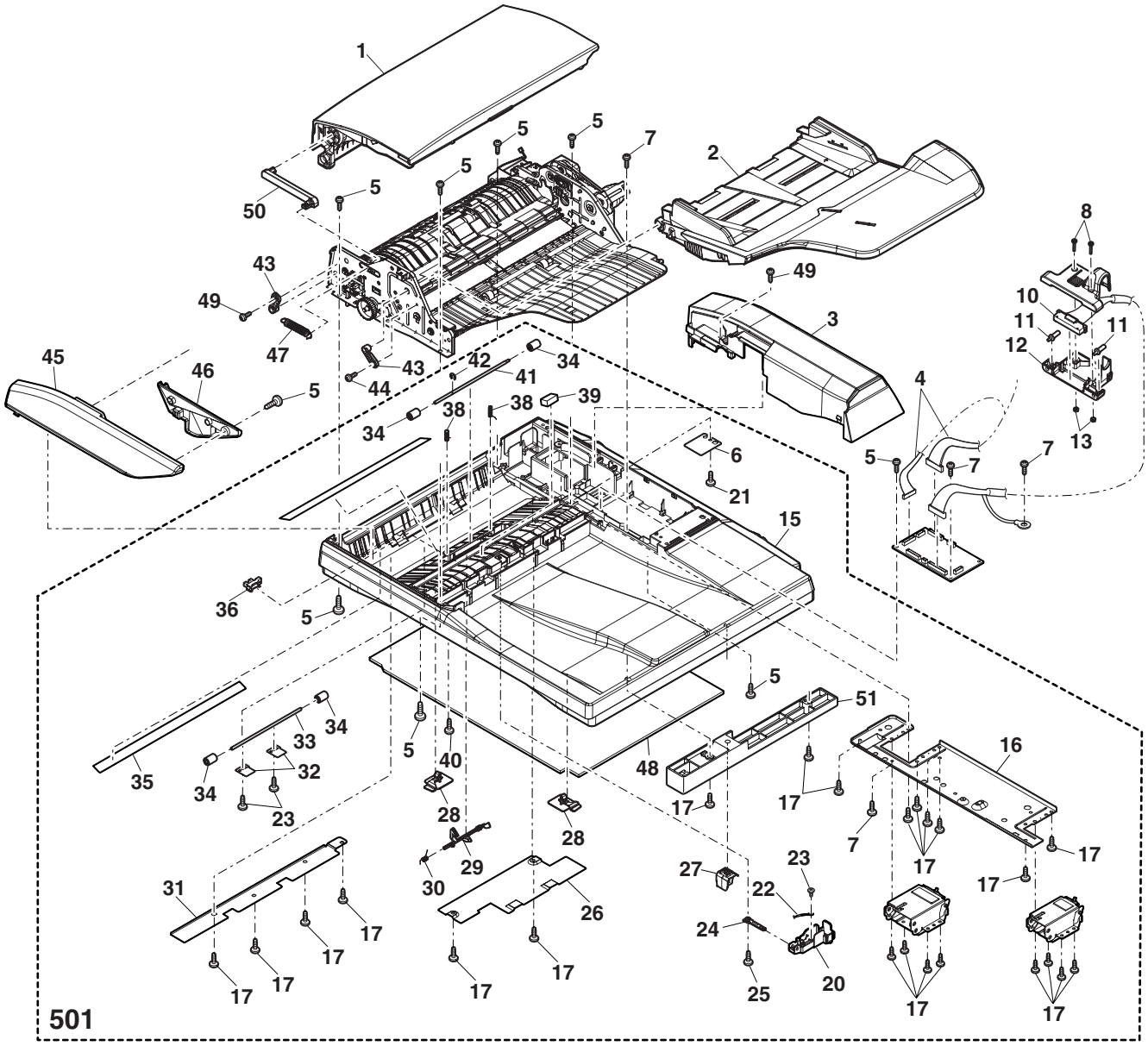

FCP08991

51 RSPF 原稿ﾄﾚｲ (RSPF Original tray)[MX-2300FG/N,MX-2700FG/N]

NO.	PARTS CODE	PRICE RANK Ex.	PRICE RANK Ja.	NEW MARK	PART RANK	DESCRIPTION	
1	LPLTP6485FCZZ	AG	DX	N	C	RSPF regulation plate F	RSPF 規制板 F
2	LPLTP6486FCZZ	AG	DX	N	C	RSPF regulation plate R	RSPF 規制板 R
3	DHAi-3764FCZZ	AK	DX	N	C	Original tray harness	原稿ﾄﾚｲﾊｰﾈｽ
4	TLABZ5063FCZZ	AP	EQ	N	D	Original size label (Except Japan)	原稿ｻｲｽﾞﾗﾍﾞﾙ
5	LSOU-0204FCZZ	AV	FG	N	D	RSPF original tray upper	RSPF 原稿ﾄﾚｲ上
6	LSOU-0205FCZZ	AU	EZ	N	D	RSPF original tray lower	RSPF 原稿ﾄﾚｲ下
7	XEBS740P10000	AA	DD		C	Screw(4×10)	ﾋﾞｽ
8	NROLP1517FCZZ	AA	DJ	N	C	Delivery follower roller RSPF	排紙従動ﾛｰﾗｰ RSPF
9	NSFTZ2914FCZZ	AP	EQ	N	C	Follower roller shaft	従動ﾛｰﾗｰ軸
10	XRESP30-06000	AA	DD		C	E ring(E3)	E ﾘﾝｸﾞ
11	MSPRC3352FCZZ	AB	DJ		C	Follower pressure spring	従動加圧ｽﾌﾟﾘﾝｸﾞ
12	CPWBF1594FCE2	AS	EQ		E	SPF VR PWB LF	SPF VR 基板 LF
13	XEBS730P08000	AC	DD		C	Screw(3×8)	ﾋﾞｽ
14	LPLTP0321QSZZ	AE	DS		C	Width detection fixing plate	幅検知取付板
15	NGERP0168QSZZ	AD	DJ		C	Width detection gear(36T)	幅検知ﾋﾟﾆｵﾝ
16	VHPGP1S73P+-1	AF	DS		B	Photo sensor(GP1S73P)	ﾌｫﾄｾﾝｻｰ
17	XEPS730P08X00	AA	DD		C	Screw(3×8X)	ﾋﾞｽ
18	NGERR0169QSZZ	AE	DS		C	Width detection rack gear	幅検知ﾗｯｸ
19	MSPRP0315QSZZ	AD	DJ		C	Regulation plate spring	規制板ｽﾌﾟﾘﾝｸﾞ
20	MLEVP0098QSZZ	AC	DJ		C	Original detect actuator	原稿検知ｱｸﾁｭｴｰﾀｰ

52 RSPF 給紙部 (RSPF Paper feeding section)[MX-2300FG/N,MX-2700FG/N]

NO.	PARTS CODE	PRICE RANK Ex.	PRICE RANK Ja.	NEW MARK	PART RANK	DESCRIPTION	
1	PCOVP1851FCZZ	AT	EZ	N	C	Upper cover	上ｶﾊﾞｰ
2	QSW-M0502FCPZ	AH	DX	N	B	Interlock switch(51632C531N)	ｲﾝﾀｰﾛｯｸｽｲｯﾁ
3	DHAi-3763FCZZ	AH	DX	N	C	Paper feeding roller harness	給紙ﾛｰﾗｰﾊｰﾈｽ
4	PGiDM2137FCZZ	AV	FG	N	C	Paper feeding transport upper guide	給紙搬送上ｶﾞｲﾄﾞ
5	NSFTZ2913FCZZ	AX	FQ	N	C	Paper feeding shaft	給紙軸
6	LPiNS0089FCZZ	AA	DD		C	Spring pin	ｽﾌﾟﾘﾝｸﾞﾋﾟﾝ
7	XRESP50-06000	AA	DD		C	E ring(E5)	E ﾘﾝｸﾞ
8	XPSSP20-10000	AA	DD	N	C	Spring pin(φ2-10)	ｽﾌﾟﾘﾝｸﾞﾋﾟﾝ
9	NBRGM0096FCZ1	AC	DJ		C	Bearing	軸受
10	NGERH0863FCBZ	AD	DJ		C	Pick up gear(18T)	ﾋﾟｯｸｱｯﾌﾟｷﾞﾔ
11	MARMP0324FCZZ	AB	DJ	N	C	Lock arm	ﾛｯｸｱｰﾑ
12	MARMP0339FCZZ	AC	DJ	N	C	Lock release arm	ﾛｯｸ解除ｱｰﾑ
13	MARMP0330FCZZ	AC	DJ	N	C	Paper lock arm	紙ﾛｯｸｱｰﾑ
14	PGiDM2138FCZZ	AD	DJ	N	C	Upper transport auxiliary guide	上搬送補助ｶﾞｲﾄﾞ
16	XRESP40-06000	AA	DD		C	E ring(E4)	E ﾘﾝｸﾞ
17	LHLDR1650FCZZ	AD	DJ	N	C	Pick up roller holder	ﾋﾟｯｸｱｯﾌﾟﾛｰﾗｰﾎﾙﾀﾞｰ
18	NSFTZ2915FCZZ	AM	EG	N	C	Pick up shaft	ﾋﾟｯｸｱｯﾌﾟ軸
19	NPLYZ0452FCZZ	AC	DJ	N	C	Pick up pulley(18P)	ﾋﾟｯｸｱｯﾌﾟﾌﾟｰﾘｰ
20	NBLTH0442FCZZ	AD	DJ		B	Belt(132)	ﾍﾞﾙﾄ
21	NROLR1542FCZZ	AH	DX	N	B	Pick up roller	ﾋﾟｯｸｱｯﾌﾟﾛｰﾗｰ
22	PGiDM2139FCZZ	AC	DJ	N	C	Holder guide	ﾎﾙﾀﾞｰｶﾞｲﾄﾞ
23	NROLR1541FCZZ	AG	DX	N	B	Paper feeding separation roller	給紙分離ﾛｰﾗｰ
24	NCPL-0049FCZZ	AH	DX		B	Oneway coupling	ﾜﾝｳｪｲｶｯﾌﾟﾘﾝｸﾞ
25	NPLYZ0437FCZZ	AT	EZ		C	Paper feeding pulley RSPF(18P)	給紙ﾌﾟｰﾘｰ RSPF
26	LX-WZ0443FCPZ	AB	DD	N	C	Washer	ﾜｯｼｬｰ
28	XEBS740P10000	AA	DD		C	Screw(4×10)	ﾋﾞｽ
29	PSHEP5442FCZZ	AC	DJ	N	C	PS front sheet	PS 前ｼｰﾄ
30	PMLT-1417FCZZ	AC	DJ	N	C	Pick up silence cushion	ﾋﾟｯｸｱｯﾌﾟ消音ﾓﾙﾄ
31	MSPRD3378FCZZ	AB	DJ		C	Detection return spring	入紙検知復帰ｽﾌﾟﾘﾝｸﾞ
32	MLEVP0932FCZZ	AC	DJ	N	C	Detection actuator	入紙検知ｱｸﾁｭｴｰﾀｰ
33	MLEVP0953FCZZ	AC	DJ		C	PE actuator	PE ｱｸﾁｭｴｰﾀｰ
34	VHPGP1S73P+-1	AF	DS		B	Photo sensor(GP1S73P)	ﾌｫﾄｾﾝｻｰ
35	VHPGP1A71L3-1	AG	DS		B	Photo sensor(GP1A71L3)	ﾌｫﾄｾﾝｻｰ
36	NSFTZ0009QSPZ	AL	EB		C	Transport follower shaft	搬送従動軸
37	NROLP1517FCZZ	AA	DJ	N	C	Delivery follower roller RSPF	排紙従動ﾛｰﾗｰ RSPF
38	LHLDZ1755FCZZ	AC	DJ	N	C	PS pressure welding holder	PS 圧接ﾎﾙﾀﾞｰ
39	MSPRC3571FCZZ	AB	DJ	N	C	PS pressure welding spring	PS 圧接ｽﾌﾟﾘﾝｸﾞ
41	XWHS730-05080	AA	DD		C	Washer(φ3-8t0.5)	ﾜｯｼｬｰ
42	XEBS730P16000	AA	DD		C	Screw(3×16)	ﾋﾞｽ
43	PSHEP5466FCZZ	AA	DJ	N	C	PS rear sheet	PS 後ｼｰﾄ
44	MLEVP1034FCZZ	AC	DJ	N	C	Change lever	切替ﾚﾊﾞｰ
46	XEPS730P08X00	AA	DD		C	Screw(3×8X)	ﾋﾞｽ

51 RSPF 原稿トレイ (RSPF Original tray)[MX-2300FG/N,MX-2700FG/N]

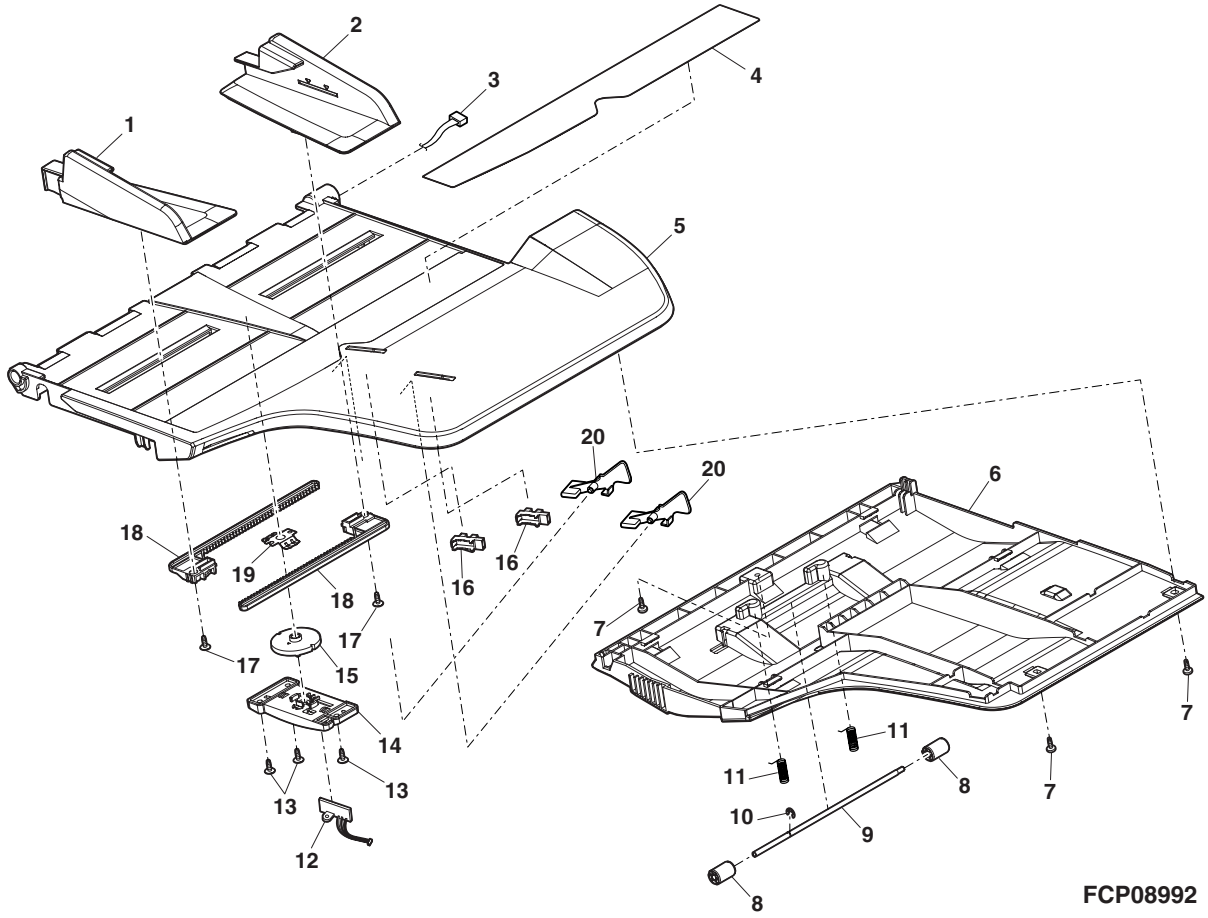

52 RSPF 給紙部 (RSPF Paper feeding section)[MX-2300FG/N,MX-2700FG/N]

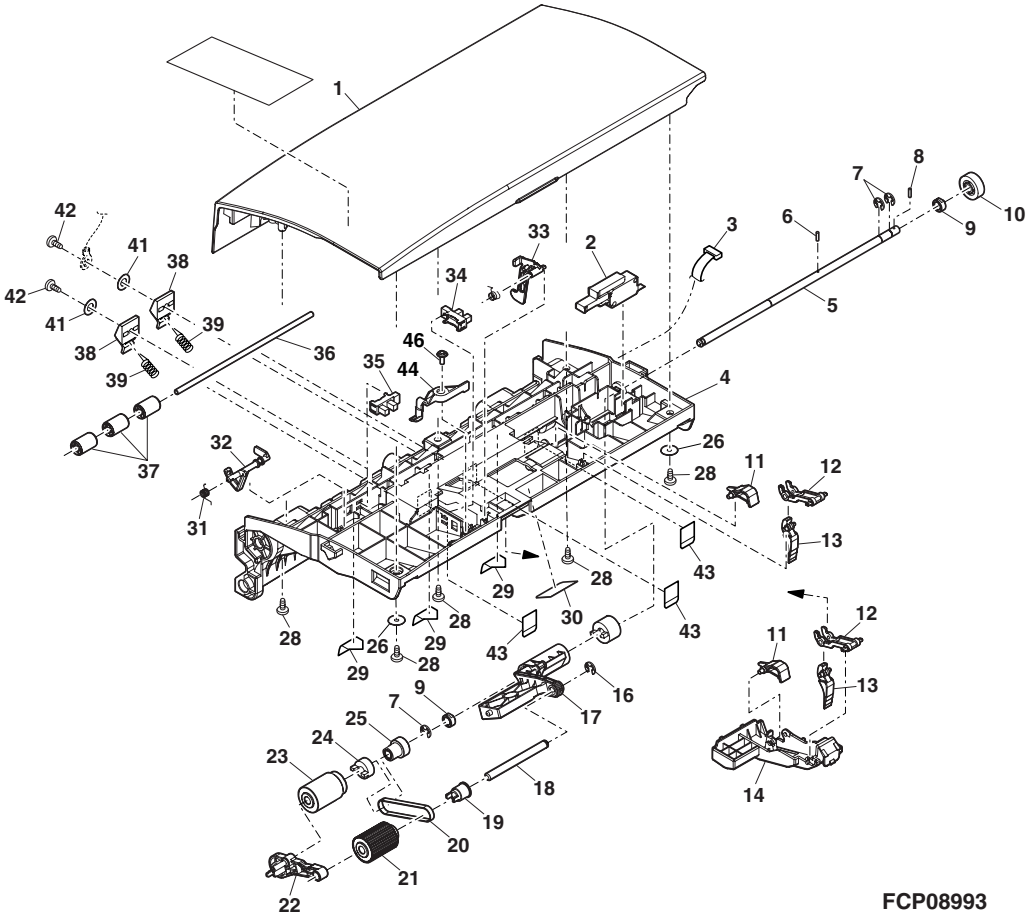

53 RSPF 分離部 (RSPF Separation section)[MX-2300FG/N,MX-2700FG/N]

NO.	PARTS CODE	PRICE RANK Ex.	PRICE RANK Ja.	NEW MARK	PART RANK	DESCRIPTION	
1	PCOVP1850FCZZ	AD	DJ	N	C	Separation roller cover	分離ﾛｰﾗｰｶﾊﾞｰ
3	XHBS740P08000	AA	DD		C	Screw(4×8)	ﾋﾞｽ
4	PCLR-0461FCZZ	AC	DJ		C	U-turn collar	U ﾀｰﾝｺﾛ
5	PGiDM2136FCZZ	AL	EB	N	D	Separation transport guide	分離搬送ｶﾞｲﾄﾞ
6	NSFTZ0009QSPZ	AL	EB		C	Transport follower shaft	搬送従動軸
7	NROLP1517FCZZ	AA	DJ	N	C	Delivery follower roller RSPF	排紙従動ﾛｰﾗｰ RSPF
8	PSHEZ3130FCZZ	AB	DD		C	Rotation plate sheet	回転板ｼｰﾄ
9	MSPRC3355FCZZ	AB	DJ		C	Roller spring	圧縮従動ﾛｰﾗｰｽﾌﾟﾘﾝｸﾞ
10	NROLR1555FCZZ	AG	DX	N	B	Separation roller	分離ﾛｰﾗｰ
12	LPiNS0089FCZZ	AA	DD		C	Spring pin	ｽﾌﾟﾘﾝｸﾞﾋﾟﾝ
13	XRESP50-06000	AA	DD		C	E ring(E5)	E ﾘﾝｸﾞ
14	NSFTZ2912FCZZ	AX	FG	N	C	Separation shaft	分離軸
15	LHLDZ1670FCZZ	AC	DJ		C	Separation roller fulcrum holder	分離ﾛｰﾗｰ支点ﾎﾙﾀﾞｰ
16	MSPRT3391FCZZ	AB	DJ		C	SPF pressure spring	SPF 圧接ｽﾌﾟﾘﾝｸﾞ
17	XEBS740P10000	AA	DD		C	Screw(4×10)	ﾋﾞｽ
18	LPLTM6557FCZZ	AH	DX	N	D	Separation PG reinforce plate	分離 PG 補強板
21	PGiDM2135FCZZ	AN	EG	N	C	Middle guide	中間ｶﾞｲﾄﾞ
23	NBRGP0668FCZZ	AE	DJ		C	Stopper bearing	ｽﾄｯﾊﾟｰ軸受
24	XRESP40-06000	AA	DD		C	E ring(E4)	E ﾘﾝｸﾞ
26	XEBS730P08000	AC	DD		C	Screw(3×8)	ﾋﾞｽ
	(Unit)						
901	CGiDM2136DS51	BF	GN	N	E	Separation roller guide unit	分離ﾛｰﾗｰｶﾞｲﾄﾞﾕﾆｯﾄ

53 RSPF 分離部 (RSPF Separation section)[MX-2300FG/N,MX-2700FG/N]

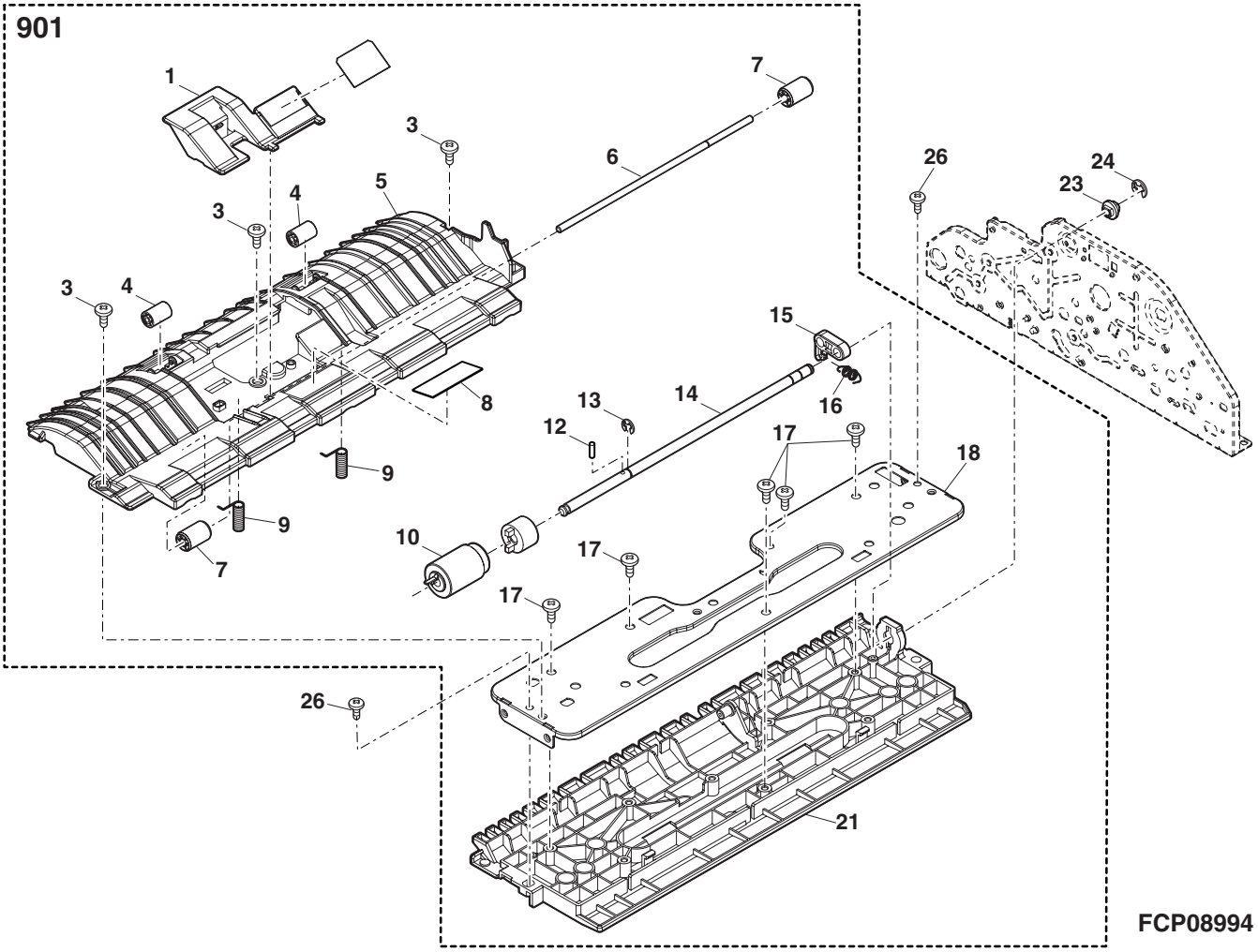

54 RSPF 搬送部 1(RSPF Transport section 1)[MX-2300FG/N,MX-2700FG/N]

NO.	PARTS CODE	PRICE RANK Ex.	PRICE RANK Ja.	NEW MARK	PART RANK	DESCRIPTION	
1	NBRGM0501FCZZ	AB	DJ		C	Metal bearing	ﾒﾀﾙ軸受
2	MSPRC3357FCZZ	AA	DJ		C	Brake spring	ﾌﾞﾚｰｷｽﾌﾟﾘﾝｸﾞ
3	XWHS760-08115	AA	DD	N	C	Washer	ﾜｯｼｬｰ
4	PRNGP0090FCZZ	AA	DJ		C	E-ring(E5)	樹脂 E ﾘﾝｸﾞ
5	PCLC-0337FCZZ	BA	FX	N	B	SP clutch SPF	PS ｸﾗｯﾁ SPF
6	XRESP40-06000	AA	DD		C	E ring(E4)	E ﾘﾝｸﾞ
7	NGERH1681FCZZ	AC	DJ	N	C	Gear(36T)	ｷﾞﾔ
8	XRESP30-04000	AA	DD		C	E ring(E3)	E ﾘﾝｸﾞ
9	NGERH1682FCZZ	AT	EZ		C	Oneway gear(32T)	ﾜﾝｳｪｲｷﾞﾔ
10	XRESP50-06000	AA	DD		C	E ring(E5)	E ﾘﾝｸﾞ
11	NPLYZ0454FCZZ	AC	DJ		C	Gear pulley(25/24)	ｷﾞﾔﾌﾟｰﾘｰ
12	NBLTH0444FCZZ	AS	EQ	N	B	Belt(200)	ﾍﾞﾙﾄ
13	PSHEZ5377FCZZ	AA	DJ	N	C	Pulley sheet(25)	ﾌﾟｰﾘｰﾏｲﾗｰ
15	XPSSP20-10000	AA	DD	N	C	Spring pin(φ2-10)	ｽﾌﾟﾘﾝｸﾞﾋﾟﾝ
17	NPLYZ0453FCZZ	AC	DJ	N	C	Drive pulley(24P)	駆動ﾌﾟｰﾘｰ
19	NROLR1545FCZ1	BD	GJ	N	B	Delivery roller	排紙ﾛｰﾗｰ
20	NROLR1552FCZZ	AX	FG	N	B	Reading front roller	読取前ﾛｰﾗｰ
21	NROLR1543FCZZ	AU	EZ	N	B	PS roller	PS ﾛｰﾗｰ
22	CFRM-1167FC01	AL	EB	N	C	Frame F AS	ﾌﾚｰﾑ F AS
23	CFRM-1183FC01	AR	EQ		C	Frame R AS	ﾌﾚｰﾑ R AS
24	LX-WZ5002BCZZ	AA	DD		C	Poly slider	ﾎﾟﾘｽﾗｲﾀﾞｰ

54 RSPF 搬送部 1(RSPF Transport section 1)[MX-2300FG/N,MX-2700FG/N]

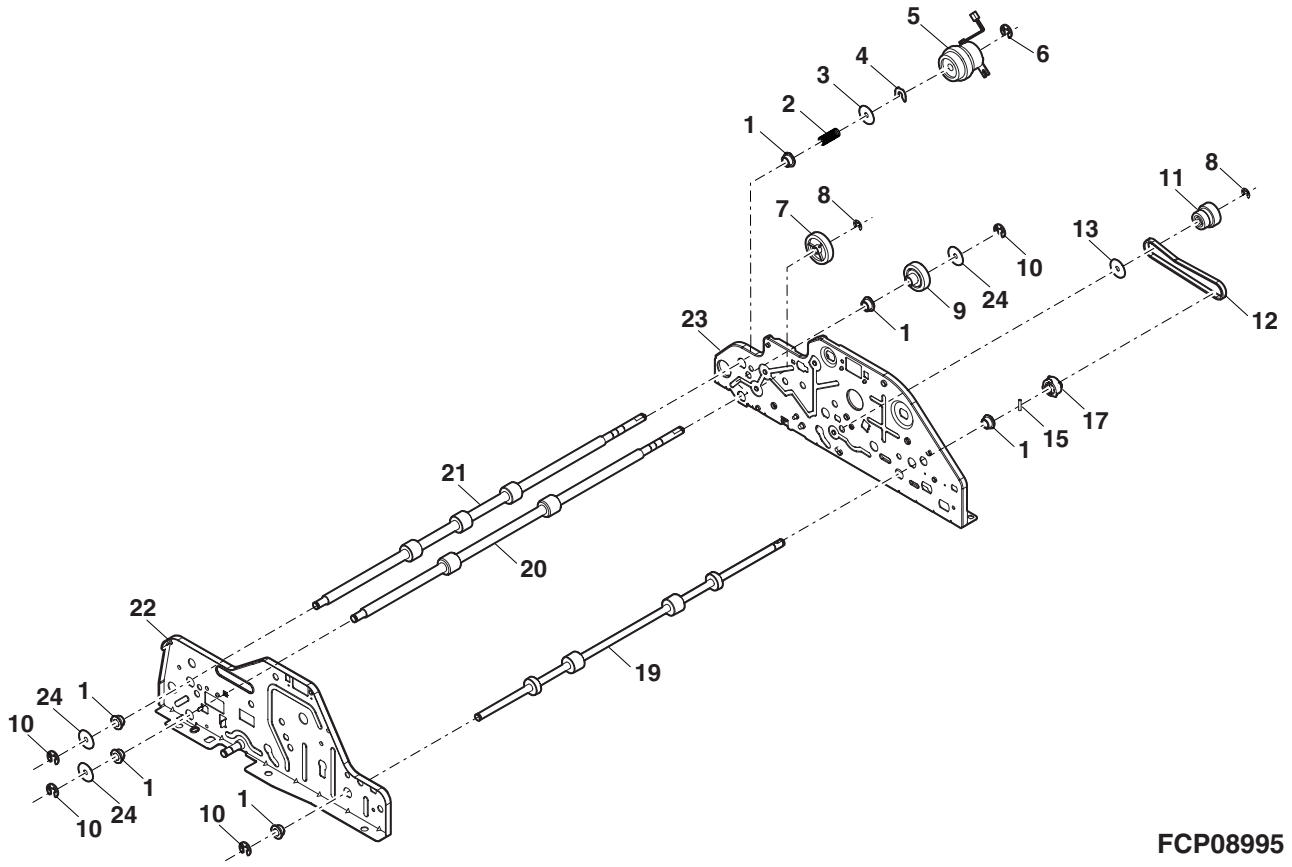

55 RSPF 搬送部 2(RSPF Transport section 2)[MX-2300FG/N,MX-2700FG/N]

NO.	PARTS CODE	PRICE RANK Ex.	PRICE RANK Ja.	NEW MARK	PART RANK	DESCRIPTION	
1	NRŌLR1535FCZZ	AT	EZ	N	B	SWB transport roller	SWB 搬送ﾛｰﾗｰ
2	XEBS740P10000	AA	DD		C	Screw(4×10)	ﾋﾞｽ
3	PGｉDM2130FCZZ	AV	FG	N	D	Transport guide	搬送ｶﾞｲﾄﾞ
4	CFRM−1183FC01	AR	EQ		C	Frame R AS	ﾌﾚｰﾑ R AS
6	NGERH1680FCZZ	AC	DJ	N	C	Gear(20T)	ｷﾞｬ
7	XRESP30−04000	AA	DD		C	E ring(E3)	E ﾘﾝｸﾞ
8	XHBS740P08000	AA	DD		C	Screw(4×8)	ﾋﾞｽ
10	XRESP50−06000	AA	DD		C	E ring(E5)	E ﾘﾝｸﾞ
12	NGERH1646FCZZ	AC	DJ	N	C	Gear(25T)	ｷﾞｬ
13	NBRGP0041GCZZ	AD	DJ		C	Bearing	軸受
14	PRNGP0090FCZZ	AA	DJ		C	E-ring(E5)	樹脂 E ﾘﾝｸﾞ
15	NGERH1620FCZZ	AC	DJ		C	Gear(32T)	ｷﾞｬ
16	XPSSP20−10000	AA	DD	N	C	Spring pin(φ2-10)	ｽﾌﾟﾘﾝｸﾞﾋﾟﾝ
17	NBRGM0501FCZZ	AB	DJ		C	Metal bearing	ﾒﾀﾙ軸受
18	PGｉDM2150FCZZ	AE	DJ	N	C	Reversal rear guide	反転後ｶﾞｲﾄﾞ
19	MSPRD3380FCZ1	AB	DJ	N	C	Gate spring	ｹﾞｰﾄｽﾌﾟﾘﾝｸﾞ
20	MLEVP0963FCZZ	AC	DJ	N	C	Reversal gate link lever 1	反転ｹﾞｰﾄﾘﾝｸﾚﾊﾞｰ 1
21	CSŌU−0206DS51	BA	FX	N	E	Middle tray unit	中間ﾄﾚｲﾕﾆｯﾄ
22	PGｉDM2152FCZZ	AL	EB	N	D	Reversal guide	反転ｶﾞｲﾄﾞ
23	PSHEZ5375FCZZ	AD	DJ	N	C	Reading rear PG sheet	読取後 PG ｼｰﾄ
24	PGｉDM2134FCZZ	AN	EG	N	D	Delivery upper guide	排紙上ｶﾞｲﾄﾞ
25	MLEVP0974FCZZ	AD	DJ	N	C	Reversal rear actuator	反転後ｱｸﾁｭｴｰﾀｰ
26	MSPRD3377FCZZ	AB	DJ		C	Reversal rear spring	反転後ｽﾌﾟﾘﾝｸﾞ
27	MSPRC3353FCZZ	AB	DJ		C	Reading plate spring	読取板圧接ｽﾌﾟﾘﾝｸﾞ
28	VHPGP1A71L3−1	AG	DS		B	Photo sensor(GP1A71L3)	ﾌｫﾄｾﾝｻｰ
29	LPLTM6556FCZZ	AC	DJ		C	Paper feeding sensor fixing plate	給紙ｾﾝｻｰ取付板
31	NBRGM0501FCZZ	AB	DJ		C	Metal bearing	ﾒﾀﾙ軸受
32	CFRM−1167FC01	AL	EB	N	C	Frame F AS	ﾌﾚｰﾑ F AS
34	DHAｉ−3762FCZZ	AK	DX	N	C	Transport harness	搬送ﾊｰﾈｽ
35	MSPRD3376FCZZ	AB	DJ		C	Reading front spring	読取前ｽﾌﾟﾘﾝｸﾞ
36	MLEVP0931FCZZ	AC	DJ	N	C	Reading front actuator	読取前ｱｸﾁｭｴｰﾀｰ
37	MLEVP0930FCZZ	AC	DJ	N	C	Paper exit actuator	出紙ｱｸﾁｭｴｰﾀｰ
38	MSPRD3375FCZZ	AB	DJ		C	Paper exit return spring	出紙復帰ｽﾌﾟﾘﾝｸﾞ
39	XRESP50−06000	AA	DD		C	E ring(E5)	E ﾘﾝｸﾞ
40	PMLT−1418FCZZ	AA	DJ	N	C	Gate stopper cushion	ｹﾞｰﾄｽﾄｯﾊﾟｰﾓﾙﾄ
41	PCŌVP2018FCZZ	AC	DJ	N	C	PS shaft cover F	PS 軸ｶﾊﾞｰ F
42	PCŌVP2019FCZZ	AC	DJ	N	C	PS shaft cover R	PS 軸ｶﾊﾞｰ R
43	PSHEP5461FCZZ	AA	DJ	N	C	PS guide sheet	PS ｶﾞｲﾄﾞﾏｲﾗｰ
501	DUNT−7479DSZZ	BG	GT	N	E	Transport paper guide unit	搬送ﾍﾟｰﾊﾟｰｶﾞｲﾄﾞﾕﾆｯﾄ

55 RSPF 搬送部 2(RSPF Transport section 2)[MX-2300FG/N,MX-2700FG/N]

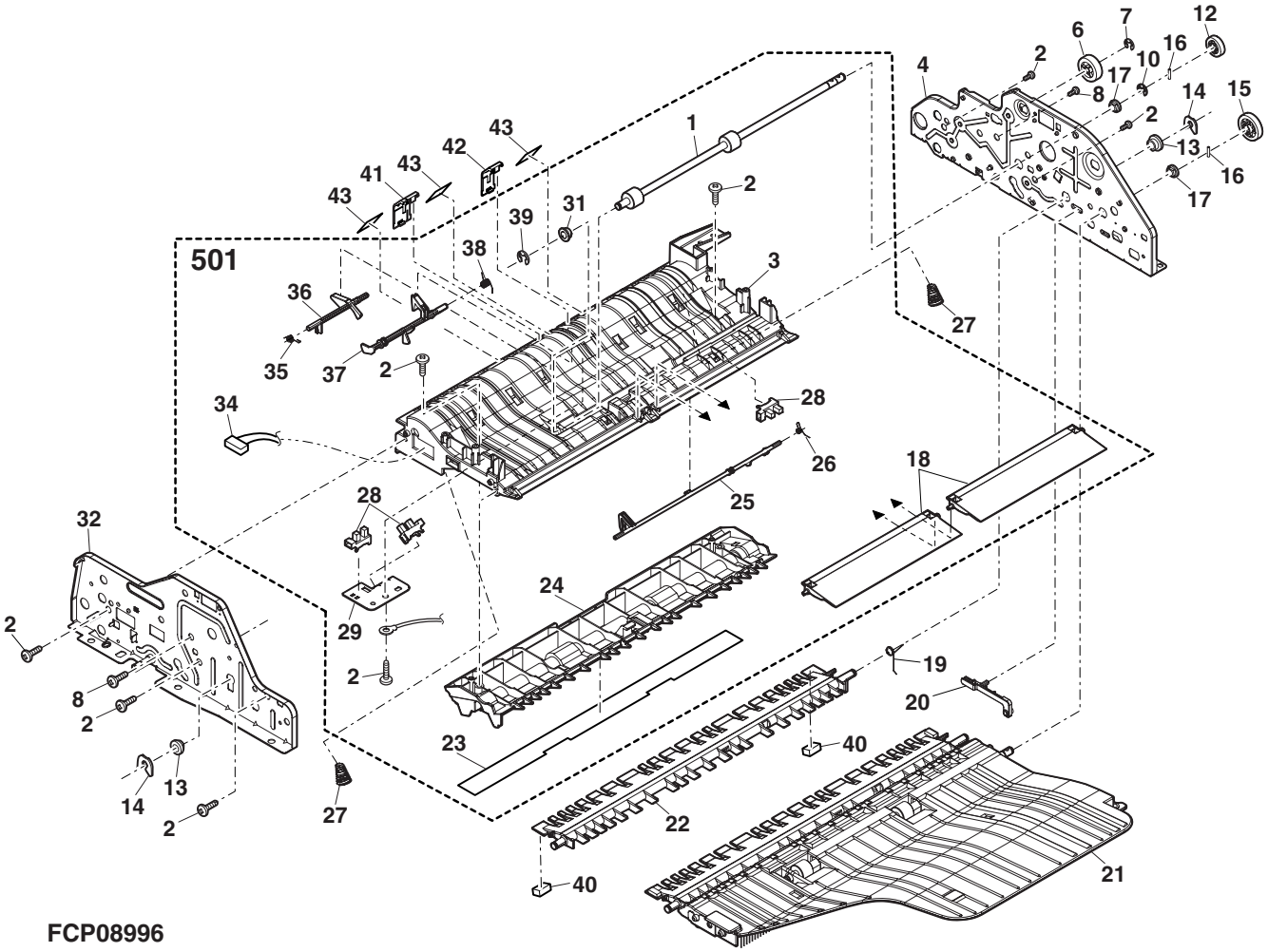

FCP08996

56 RSPF 搬送部 3(RSPF Transport section 3)[MX-2300FG/N,MX-2700FG/N]

NO.	PARTS CODE	PRICE RANK Ex.	PRICE RANK Ja.	NEW MARK	PART RANK	DESCRIPTION	
1	NRÖLR1540FCZZ	AV	FG	N	B	Roller	ﾌﾟﾗﾃﾝﾛｰﾗｰ
2	LPiNS0089FCZZ	AA	DD		C	Spring pin	ｽﾌﾟﾘﾝｸﾞﾋﾟﾝ
3	LPLTM6555FCZ1	AN	EG	N	C	Reading plate	読取板
4	MSPRC3453FCZZ	AB	DJ		C	Reading plate rotation spring	読取板回転ｽﾌﾟﾘﾝｸﾞ
5	LHLDZ1649FCZZ	AD	DJ		C	Reading plate holder R	読取板ﾎﾙﾀﾞｰR
6	NBRGC0017QSZZ	AC	DJ		C	Bearing	軸受
7	NPLYZ0451FCZZ	AC	DJ		C	Pulley(20P)	ﾌﾟｰﾘｰ
8	XRESP50-06000	AA	DD		C	E ring(E5)	E ﾘﾝｸﾞ
9	PCLR-0520FCZZ	AB	DJ	N	C	Tension collar	ﾃﾝｼｮﾝｺﾛ
10	LX-BZ0833FCPZ	AC	DD		C	Screw	回転板用段ﾋﾞｽ
11	LHLDZ1641FCZZ	AC	DJ	N	C	Tension holder A	ﾃﾝｼｮﾝﾎﾙﾀﾞｰA
12	MSPRT3392FCZZ	AB	DJ		C	Tension spring	ﾃﾝｼｮﾝｽﾌﾟﾘﾝｸﾞ
13	CFRM-1183FC01	AR	EQ		C	Frame R AS	ﾌﾚｰﾑ R AS
14	XRESP30-04000	AA	DD		C	E ring(E3)	E ﾘﾝｸﾞ
15	NPLYZ0434FCZZ	AC	DJ	N	C	Gear pulley(32/25)	ｷﾞﾔﾌﾟｰﾘｰ
16	NGERH1646FCZZ	AC	DJ	N	C	Gear(25T)	ｷﾞﾔ
17	XPSSP20-10000	AA	DD	N	C	Spring pin(φ2-10)	ｽﾌﾟﾘﾝｸﾞﾋﾟﾝ
18	NPLYZ0456FCZZ	AT	EZ		C	JAM release pulley	JAM 解除ﾌﾟｰﾘｰ
19	NBLTH0435FCZZ	AS	EQ	N	B	Belt(188)	ﾍﾞﾙﾄ
20	PSHEZ5377FCZZ	AA	DJ	N	C	Pulley sheet(25)	ﾌﾟｰﾘｰﾏｲﾗｰ
21	NBRGM0096FCZ1	AC	DJ		C	Bearing	軸受
22	PSHEZ5394FCZZ	AA	DJ	N	C	Pulley sheet(25R)	ﾌﾟｰﾘｰﾏｲﾗｰ
23	XHBS730P08000	AB	DD		C	Screw(3×8)	ﾋﾞｽ
24	LPLTM6492FCZZ	AC	DJ		C	Solenoid adjustment plate	ｿﾚﾉｲﾄﾞ調整板
25	RPLU-0366FCZZ	AQ	EQ	N	B	Gate solenoid	ｹﾞｰﾄｿﾚﾉｲﾄﾞ
26	XBBS730P04000	AA	DD		C	Screw(3×4)	ﾋﾞｽ
27	NBLTH0438FCZZ	AS	EQ	N	B	Belt(190)	ﾍﾞﾙﾄ
29	NBRGM0501FCZZ	AB	DJ		C	Metal bearing	ﾒﾀﾙ軸受
30	XWHS730-05080	AA	DD		C	Washer(φ3-8t0.5)	ﾜｯｼｬｰ
32	LHLDZ1651FCZZ	AC	DJ	N	C	Stopper holder	ｽﾄｯﾊﾟﾎﾙﾀﾞｰ
34	MSPRC3356FCZZ	AA	DJ		C	Lock spring	ﾛｯｸｽﾌﾟﾘﾝｸﾞ
35	PTME-0030QSZZ	AC	DJ		C	Open/shut lock pawl TLP	開閉ﾛｯｸ爪 TLP
36	PSHEP5422FCZZ	AH	DX	N	C	White sheet	白ﾏｲﾗｰ
37	NRÖLR1544FCZZ	AY	FQ	N	B	Reading rear roller	読取後ﾛｰﾗｰ
38	CFRM-1167FC01	AL	EB	N	C	Frame F AS	ﾌﾚｰﾑ F AS
40	NBLTH0441FCZZ	AD	DJ		B	Belt(116)	ﾍﾞﾙﾄ
41	NPLYZ0029QSZZ	AD	DJ		C	Delivery drive pulley(34T)	排紙駆動ﾌﾟｰﾘｰ
42	JKNBZ0149FCZZ	AC	DJ	N	C	JAM release knob	JAM 解除ﾉﾌﾞ
43	PRNGP0090FCZZ	AA	DJ		C	E-ring(E5)	樹脂 E ﾘﾝｸﾞ
44	MLEVP0972FCZZ	AB	DJ	N	C	Book sensor actuator	ﾌﾞｯｸｾﾝｻｰｱｸﾁｭｴｰﾀｰ
45	MSPRC0153QSZZ	AB	DJ		C	Book sensor spring	ﾌﾞｯｸｾﾝｻｰｽﾌﾟﾘﾝｸﾞ
46	VHPGP1S73P+-1	AF	DS		B	Photo sensor(GP1S73P)	ﾌｫﾄｾﾝｻｰ
47	XHBS740P08000	AA	DD		C	Screw(4×8)	ﾋﾞｽ
48	LPLTP0131QSZZ	AD	DJ		C	Book sensor fixing plate	ﾌﾞｯｸｾﾝｻｰ取付板
49	LHLDZ1648FCZZ	AD	DJ		C	Reading plate holder F	読取板ﾎﾙﾀﾞｰF
50	DHAi-3837FCZZ	AC	DJ	N	C	Reading plate earth harness	読取板ｱｰｽﾊｰﾈｽ
51	LHLDW1491FCZZ	AG	DS		C	Wire holder(MWSEB-2-01A_RT)	ﾜｲﾔｰｻﾄﾞﾙ
52	XHBS730P06000	AC	DD		C	Screw(3×6)	ﾋﾞｽ

56 RSPF 搬送部 3(RSPF Transport section 3)[MX-2300FG/N,MX-2700FG/N]

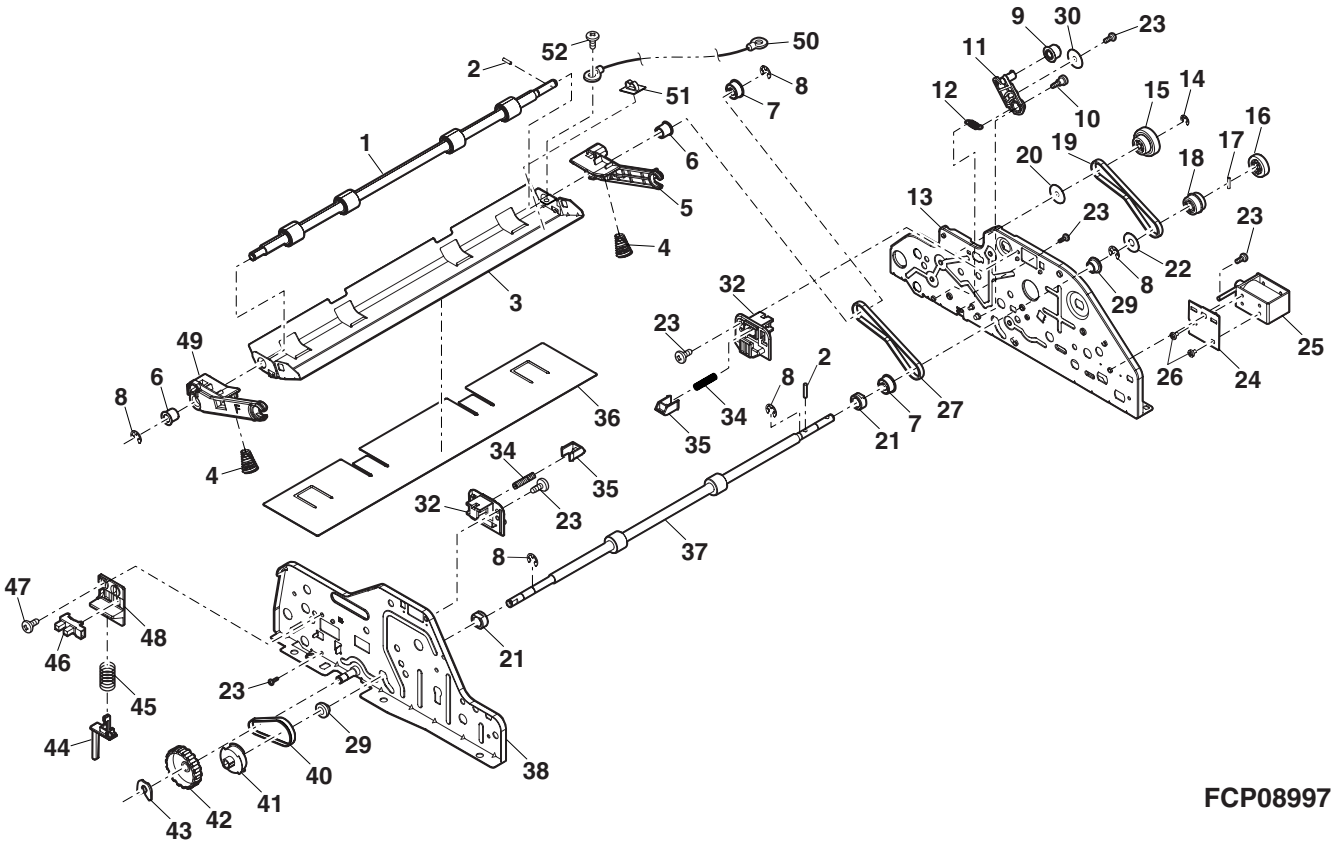

57 RSPF 中間ﾄﾚｲ (RSPF Middle tray)[MX-2300FG/N,MX-2700FG/N]

NO.	PARTS CODE	PRICE RANK Ex.	PRICE RANK Ja.	NEW MARK	PART RANK	DESCRIPTION	
1	LSOU-0206FCZZ	AR	EQ	N	D	RSPF middle tray	RSPF 中間ﾄﾚｲ
2	MSPRC3358FCZZ	AA	DJ		C	RSPF delivery follower spring	RSPF 排紙従動ｽﾌﾟﾘﾝｸﾞ
3	NROLP1517FCZZ	AA	DJ	N	C	Delivery follower roller RSPF	排紙従動ﾛｰﾗｰ RSPF
4	NSFTZ0009QSPZ	AL	EB		C	Transport follower shaft	搬送従動軸
5	NROLR1590FCZZ	AT	EZ	N	B	SWB roller	SWB ﾛｰﾗｰ
6	NBRGM0501FCZZ	AB	DJ		C	Metal bearing	ﾒﾀﾙ軸受
7	XRESP50-06000	AA	DD		C	E ring(E5)	E ﾘﾝｸﾞ
8	PBRSS0230FCZZ	AE	DS	N	B	Discharge brush RSP	除電ﾌﾞﾗｼ RSP
9	PGiDH2153FCZZ	AG	DX	N	C	Middle tray guide	中間ﾄﾚｲｶﾞｲﾄﾞ
10	XEBS740P10000	AA	DD		C	Screw(4×10)	ﾋﾞｽ
11	PSHEZ5449FCZZ	AC	DJ	N	C	Delivery sheet RSPF(38)	排紙ｼｰﾄ RSPF

58 RSPF 駆動ﾕﾆｯﾄ (RSPF Drive unit)[MX-2300FG/N,MX-2700FG/N]

NO.	PARTS CODE	PRICE RANK Ex.	PRICE RANK Ja.	NEW MARK	PART RANK	DESCRIPTION	
1	NPLYZ0435FCZZ	AC	DJ		C	Pulley(38P)	ﾌﾟｰﾘｰ
2	PSHEP5441FCZZ	AB	DJ	N	C	Pulley sheet(38)	ﾌﾟｰﾘｰﾏｲﾗｰ
4	QEARP0218FCPZ	AE	DS	N	C	Motor earth tape lower	ﾓｰﾀｰｱｰｽﾃｰﾌﾟ下
6	LSTPP0016QSZZ	AC	DJ		C	Stopper(E5)	ｽﾄｯﾊﾟｰ
7	PCLC-0017QSPZ	AT	EQ	N	B	SPF paper feeding clutch	SPF 給紙ｸﾗｯﾁ
8	NPLYZ0033QSZZ	AD	DJ		C	Coupling pulley(39P)	ｶｯﾌﾟﾘﾝｸﾞﾌﾟｰﾘｰ
9	NBLTH0443FCZZ	AE	DJ		B	Belt(250)	ﾍﾞﾙﾄ
10	NSFTZ2916FCZZ	AS	EQ	N	C	Paper feeding drive shaft	給紙駆動軸
11	XPSSP20-10000	AA	DD	N	C	Spring pin(φ2-10)	ｽﾌﾟﾘﾝｸﾞﾋﾟﾝ
12	NBRGM0096FCZ1	AC	DJ		C	Bearing	軸受
13	XHBS740P06000	AA	DD		C	Screw(4×6)	ﾋﾞｽ
14	CPLTM6558FC01	AN	EQ		C	Drive motor fixing plate AS	駆動ﾓｰﾀｰ取付板 AS
15	NGERH1619FCZZ	AC	DJ	N	C	Paper feeding drive gear(41T)	給紙駆動ｷﾞﾔ
16	NBLTH0437FCZZ	AS	EQ	N	B	Belt(204)	ﾍﾞﾙﾄ
17	NPLYZ0446FCZZ	AC	DJ	N	C	Gear pulley(48/26)	ｷﾞﾔﾌﾟｰﾘｰ
20	PRNGP0090FCZZ	AA	DJ		C	E-ring(E5)	樹脂 E ﾘﾝｸﾞ
21	XRESP50-06000	AA	DD		C	E ring(E5)	E ﾘﾝｸﾞ
22	NBLTH0436FCZZ	AD	DJ		B	Belt(176DSPF)	ﾍﾞﾙﾄ
23	XBBS730P04000	AA	DD		C	Screw(3×4)	ﾋﾞｽ
24	PCLR-0520FCZZ	AB	DJ	N	C	Tension collar	ﾃﾝｼｮﾝｺﾛ
25	XHBS730P08000	AB	DD		C	Screw(3×8)	ﾋﾞｽ
26	LX-BZ0833FCPZ	AC	DD		C	Screw	回転板用段ﾋﾞｽ
27	LHLDZ1641FCZZ	AC	DJ	N	C	Tension holder A	ﾃﾝｼｮﾝﾎﾙﾀﾞｰ A
28	MSPRT3392FCZZ	AB	DJ		C	Tension spring	ﾃﾝｼｮﾝｽﾌﾟﾘﾝｸﾞ
29	XHBS730P08000	AB	DD		C	Screw(3×8)	ﾋﾞｽ
30	NGERH1621FCZZ	AC	DJ		C	Gear(23T)	ｷﾞﾔ
31	XWHS730-05080	AA	DD		C	Washer(φ3-8t0.5)	ﾜｯｼｬｰ
32	NSFTZ2917FCZZ	AM	EG	N	C	Paper feeding follower shaft	給紙従動軸
33	NBRGM0096FCZ1	AC	DJ		C	Bearing	軸受
34	MSPRT3570FCZZ	AC	DJ	N	C	Paper feeding tension spring	給紙ﾃﾝｼｮﾝｽﾌﾟﾘﾝｸﾞ
	(Unit)						
901	DUNT-7478DSZZ	BB	FX	N	E	Drive fixing plate unit	駆動取付板ﾕﾆｯﾄ

57 中間ﾄﾚｲ (Middle tray)[MX-2300FG/N,MX-2700FG/N]

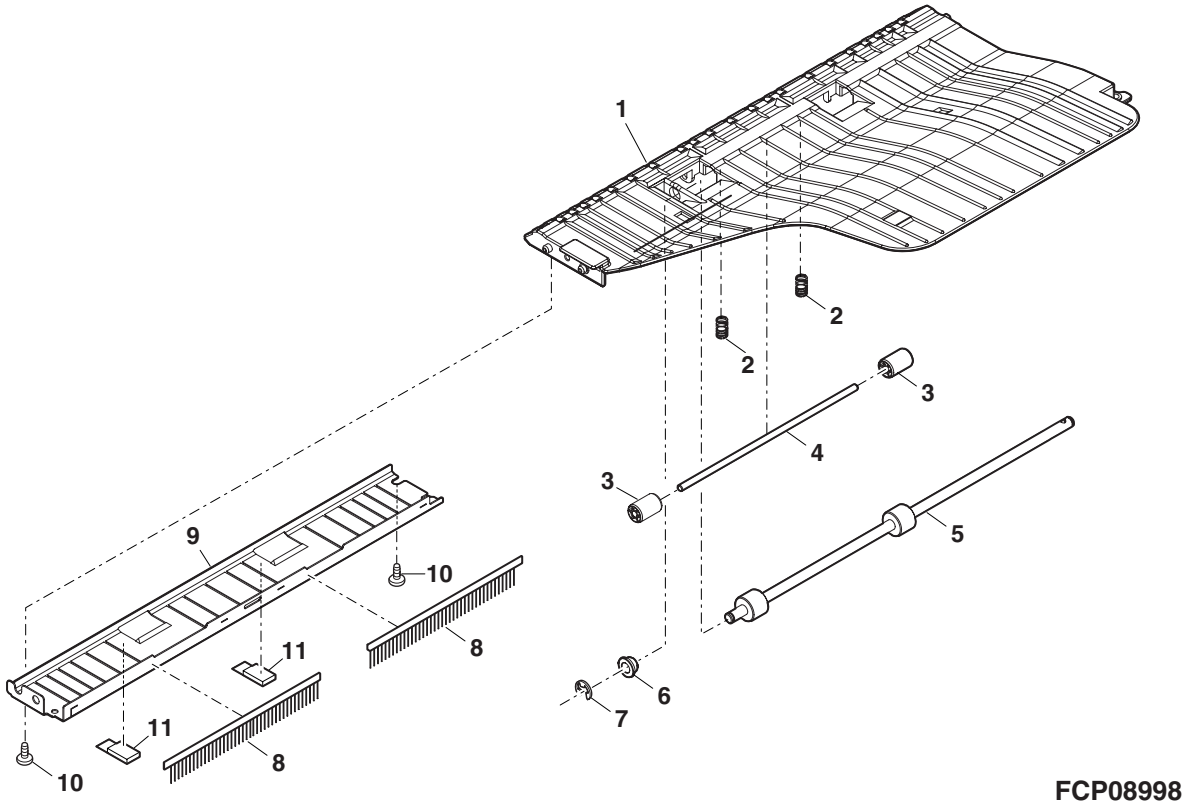

58 駆動ﾕﾆｯﾄ (Drive unit)[MX-2300FG/N,MX-2700FG/N]

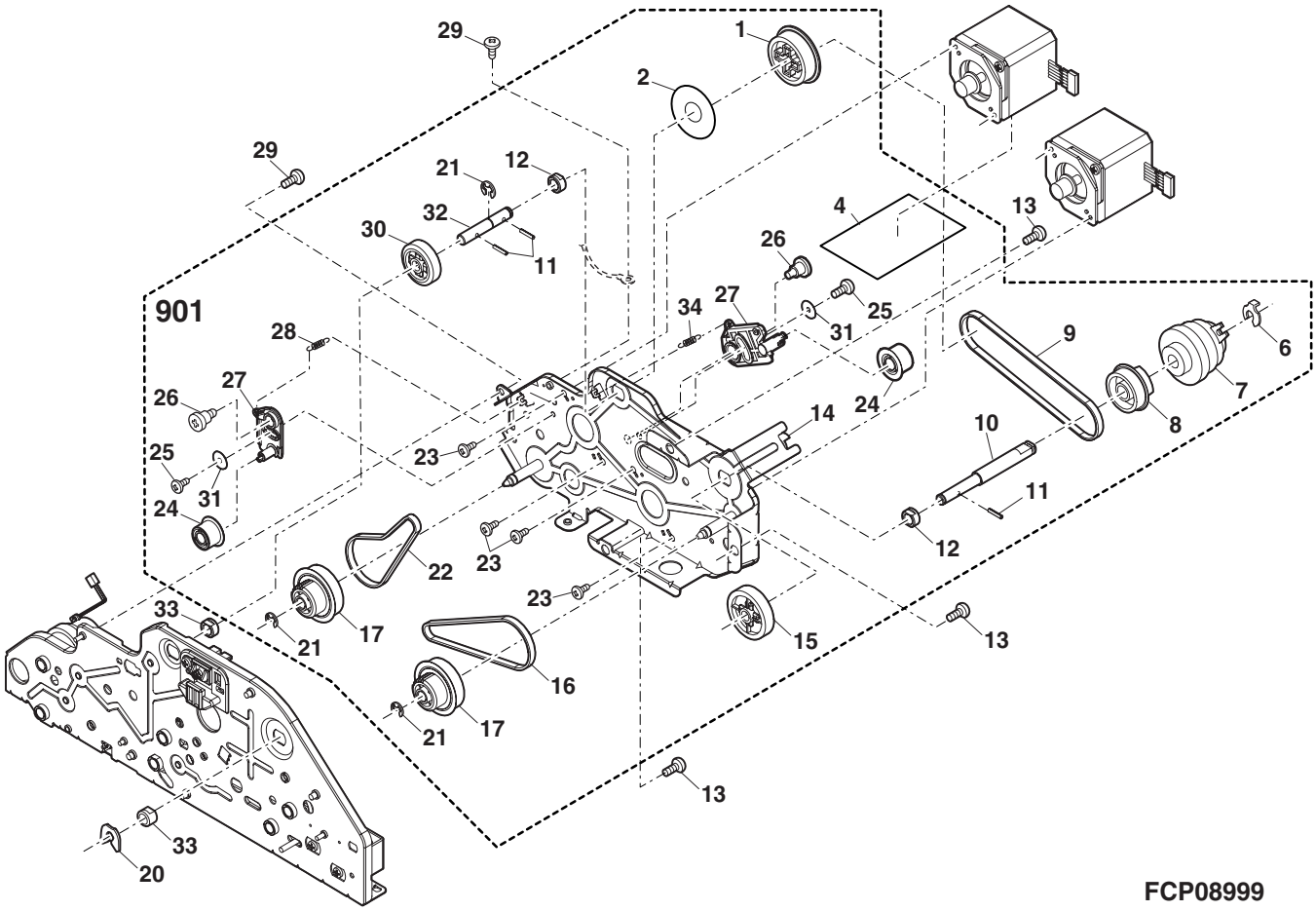

59 梱包及び付属品 (Packing material & Accessories)

NO.	PARTS CODE	PRICE RANK Ex.	PRICE RANK Ja.	NEW MARK	PART RANK	DESCRIPTION	
6	SPAKA0616QSZZ	AA	DJ	N	D	Fixing brock	固定ﾌﾞﾛｯｸ
9	LX-BZ0787FCPZ	AD	DD	N	C	2nd,3rd mirror lock screw	2/3 ﾐﾗｰﾛｯｸﾋﾞｽ
10	LX-WZ0326FCPZ	AC	DD	N	C	Washer	ﾅｲﾛﾝﾜｯｼｬ
11	TCADZ1178FCZZ	AB	DJ		D	Caution card	開梱注意紙
12	SPAKA6075FCZZ	AE	DJ	N	D	Protection sheet [Except MX-2300G,MX-2700G]	保護ｼｰﾄ
15	LSOU-0179FCP5	AV	FG	N	D	Delivery tray [MX-2300FG,MX-2700FG]	排紙ﾄﾚｲ
	LSOU-0177FCP5	AQ	EQ	N	D	Delivery extension tray [MX-2300FG,MX-2700FG]	排紙延長ﾄﾚｲ
20	SSAKA5004CCZZ	AA	DD		D	Vinyl bag (Japan)	ﾎﾞﾘ袋
21	LHLDW1226FCZZ	AB	DJ		C	Turn fastener	ﾀｰﾝﾌｧｽﾅｰ
22	TCADZ1275FCZZ	AB	DJ		D	Cassette caution card	ｶｾｯﾄ注意紙
25	LFiX-0627FCZZ	AD	DJ	N	C	Paper fixing arm	用紙押えｱｰﾑ
	LHLDZ1715FCZZ	AE	DJ	N	C	Paper fixing holder	用紙押えﾎﾙﾀﾞｰ
27	CYOK-0060DS52	AZ	FQ	N	A	Waste toner bottol	廃ﾄﾅｰﾎﾞﾄﾙ
28	SSAKZ0034FCZZ	BQ	LP	N	D	Vinyl bag A [Except MX-2300G,MX-2700G]	本体導電袋 A
29	PCOVP2022FCZZ	AP	EQ	N	D	Manual cover	取説ｶﾊﾞｰ
30	LBNDC0075FCZZ	AB	DJ		C	Band (Australia,New zealand)	AC ｺｰﾄﾞﾀｲ
31	SSAKA3001CCZZ	AA	DD		D	Vinyl bag(140×360)	ﾎﾞﾘ袋
32	SSAKZ0037FCZZ	AB	DJ	N	D	Vinyl bag(200×400)	ﾎﾞﾘ袋
79	SPAKA0040YSZZ	AH	DX	N	D	DR support pad A	DR 保持ﾊﾟｯﾄﾞ A
80	SPAKA0041YSZZ	AH	DX	N	D	DR support pad B	DR 保持ﾊﾟｯﾄﾞ B
81	SPAKA0545YSZZ	AE	DS	N	D	DR set pad	DR 集合ﾊﾟｯﾄﾞ
99	SPAKG0544YS11	AS	EQ	N	D	DR enclosure case	DR 集合ｹｰｽ
100	CCADZ1561FC01	AK	DX		D	Maintenance card (Japan)	ﾒﾝﾃﾅﾝｽｶｰﾄﾞ
	CCADZ1518FC01	AB	DJ		D	Maintenance card (Except Japan)	ﾒﾝﾃﾅﾝｽｶｰﾄﾞ
102	RCORF0046FCZZ	AH	DX	N	C	Core [MX-2300FG,MX-2700FG]	ｺｱ
103	SSAKA2440QCZZ	AB	DD		D	Vinyl bag(280×410) [MX-2300FG,MX-2700FG]	ﾎﾞﾘ袋
104	SSAKH3013CCZZ	AA	DD		D	Vinyl bag(120×220) [MX-2300FG,MX-2700FG]	ﾎﾞﾘ袋
106	TCADS1693FCZZ	AA	DS		D	Instlation card [MX-2300FG,MX-2700FG]	納入設置報告書
107	TiNSJ3122FCZZ	BB	GD	N	D	Easy operation guide (Japanese) [MX-2300G/FG,MX-2700G/FG]	簡単操作ｶﾞｲﾄﾞ
	TiNSE3123FCZZ	BB	GD	N	D	Easy operation guide (English [U.S.A,Canada]) [MX-2300N,MX-2700N]	簡単操作ｶﾞｲﾄﾞ
108	TiNSJ3135FCZZ	AQ	EQ	N	D	Q/A guide (Japanese)[MX-2300G/FG,MX-2700G/FG]	Q/A ｶﾞｲﾄﾞ
	TiNSE3136FCZZ	AQ	EQ	N	D	Q/A guide (English [U.S.A,Canada])[MX-2300N,MX-2700N]	Q/A ｶﾞｲﾄﾞ
109	TiNSJ3148FCZZ	AQ	EQ	N	D	Install guide (Japanese)[MX-2300G/FG,MX-2700G/FG]	ｲﾝｽﾄｰﾙｶﾞｲﾄﾞ
	TiNSE3149FCZZ	AQ	EQ	N	D	Install guide (English [U.S.A,Canada])[MX-2300N,MX-2700N]	ｲﾝｽﾄｰﾙｶﾞｲﾄﾞ
110	TiNSJ3161FCZZ	AM	EG	N	D	Safe standard caution card (Japanese) [MX-2300FG,MX-2700G/FG]	安規注意書
	TiNSE3162FCZZ	AM	EG	N	D	Safe standard caution card (English [U.S.A,Canada]) [MX-2300N,MX-2700N]	安規注意書
112	CDSKA0050FC31	AR	EQ	N	D	NSX1 CD (U.S.A,Canada)[MX-2300N,MX-2700N]	NSX1 CD
113	TCADZ1757FCZZ	AH	DX	N	D	MSDS card (U.S.A,Canada,U.Kingdom) [MX-2300N,MX-2700N]	MSDS ｶｰﾄﾞ
114	TiNSE3109FCZZ	AG	DX	N	D	S desk install manual (U.S.A,Canada)[MX-2300N,MX-2700N]	S ﾃﾞｽｸｲﾝｽﾄｰﾙ手順書

59 梱包及び付属品 (Packing material & Accessories)

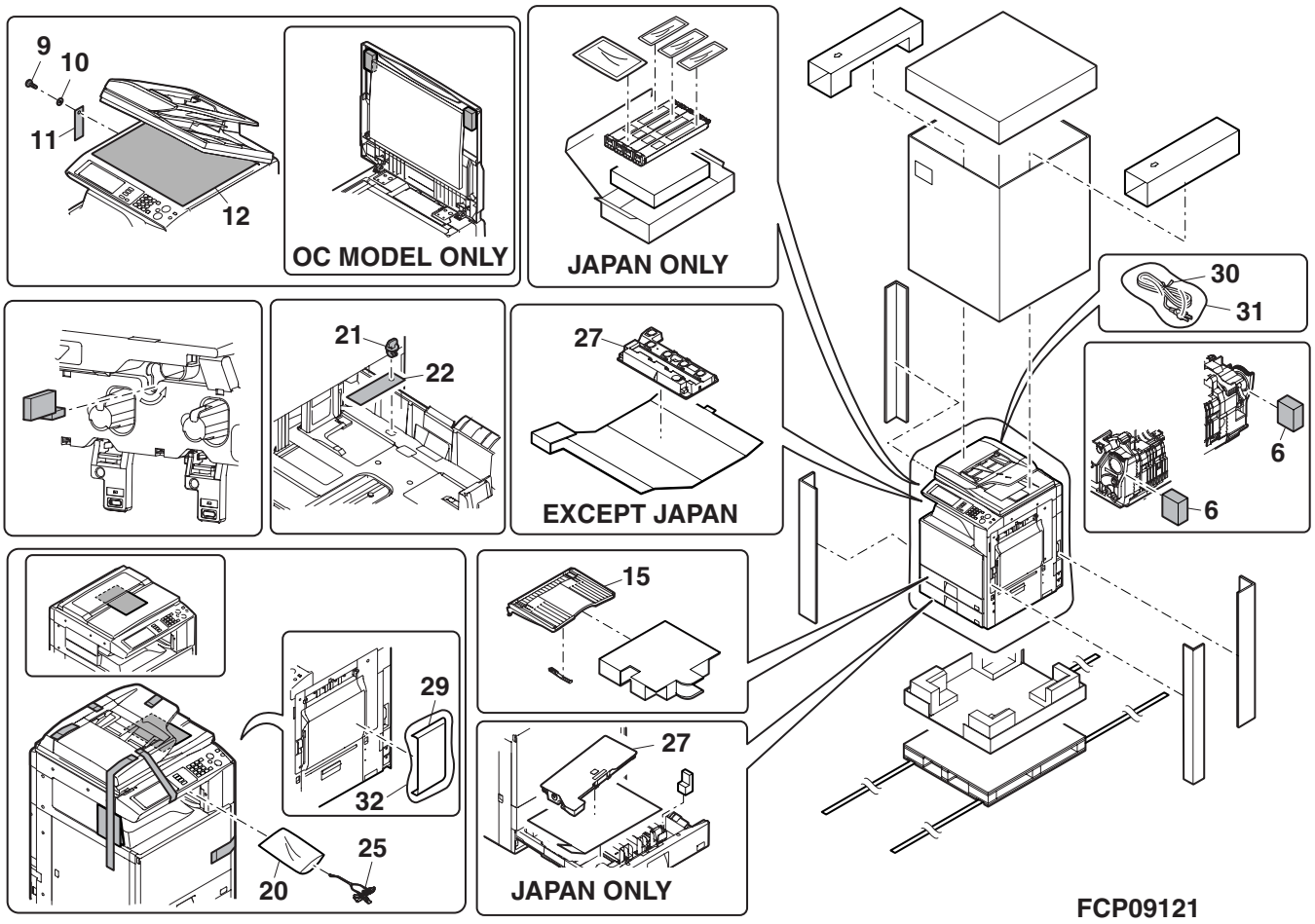

■ 索引 (Index)

PARTS CODE	NO.	PRICE R. Ex.	PRICE R. Ja.	NEW	P/R	
【C】						
CARMP0147DS54	4- 14	AZ	FQ	N	E	
CBDGD0050FC01	2- 52	AE	DJ	N	D	
CBDGD0050FC02	2- 52	AE	DJ	N	D	
CBDGD0050FC03	2- 52	AE	DJ	N	D	
CBDGD0050FC04	2- 52	AE	DJ	N	D	
CBDGD0050FC05	2- 52	AE	DJ	N	D	
CBDGD0050FC06	2- 52	AE	DJ	N	D	
CBRGP0739DS51	40- 57	AP	EQ	N	E	
CBTN-0272FC01	5- 14	AR	EQ	N	C	
CBTN-0272FC02	5- 15	AL	EB	N	C	
CBTN-0274FC01	5- 7	AM	EG	N	C	
CBTN-0275FC01	5- 8	AE	DJ	N	C	
CBTN-0275FC02	5- 8	AE	DJ	N	C	
CBTN-0276FC01	5- 9	AE	DJ	N	C	
CBTN-0278FC01	5- 12	AH	DX	N	C	
CBTN-0279FC01	5- 11	AH	DX	N	C	
CCAB-1089DS51	13-901	BD	GN	N	E	
CCAB-1090FC01	2- 39	BA	FX	N	D	
CCADZ1518FC01	59-100	AB	DJ		D	
CCADZ1561FC01	59-100	AK	DX		D	
CCASP0177DS51	9-501	BG	GT	N	E	
CCLEZ0020QS01	50- 27	AK	EB		D	
CCŌV-0243DS51	3-901	BR	LX	N	E	
CCŌV-0243FC31	3-501	BL	HL	N	E	
CCŌVP1607FC358	39- 42	BB	GN		E	
CCŌVP1846DS51	22-501	AN	EQ	N	E	
CDAiU0619DS60	7- 6	BP	LP	N	E	
〃	8-901	BP	LP	N	E	
CDAiU0694DS51	17-901	BL	HG	N	E	
〃	18-901	BL	HG	N	E	
CDAiU0699DS51	2-501	AL	EB	N	E	
CDAiU0699DS71	2- 35	AK	EB	N	E	
CDAiU0700DS52	34-901	BY	TF	N	E	
〃	35-901	BY	TF	N	E	
〃	36-901	BY	TF	N	E	
CDAiU0700DS53	34-901	BY	TF	N	E	
〃	35-901	BY	TF	N	E	
〃	36-901	BY	TF	N	E	
CDSKA0050FC31	59-112	AR	EQ	N	D	
CFiLW0302FC01	5- 1	AR	EQ	N	D	
CFiLW0302FC02	5- 1	AR	EQ	N	D	
CFiLW0302FC03	5- 1	AR	EQ	N	D	
CFiLW0303FC01	5- 13	AE	DS	N	D	
CFLY-0013FC01	41- 27	AN	EG	N	C	
CFRM-1148DS51	39-901	BV	RB	N	E	
CFRM-1152DS52	24-901	BD	GN	N	E	
CFRM-1153DS51	25-901	AZ	FQ	N	E	
CFRM-1155FC01	12- 12	AH	DX	N	D	
CFRM-1157FC01	36- 37	AR	EQ	N	C	
CFRM-1158FC01	36- 18	AU	EZ	N	C	
CFRM-1167FC01	54- 22	AL	EB	N	C	
〃	55- 32	AL	EB	N	C	
〃	56- 38	AL	EB	N	C	
CFRM-1170FC01	26- 17	AQ	EQ	N	C	
CFRM-1174FC01	33- 8	AL	EB	N	C	
CFRM-1175FC01	33- 23	AL	EB	N	C	
CFRM-1176DS51	38-502	BF	GN	N	E	
CFRM-1176FC02	38- 41	AQ	EQ	N	C	
CFRM-1183FC01	54- 23	AR	EQ		C	
〃	55- 4	AR	EQ		C	
〃	56- 13	AR	EQ		C	
CFRM-1186DS51	41-901	CD	UD	N	E	
CFRM-1186DS71	40-901	BU	NN	N	E	
〃	41-501	BU	NN	N	E	
CFRM-1186FC01	40- 29	AT	EZ	N	C	
CFRM-1187DS51	40- 2	BH	GX	N	C	
CFRM-1191FC01	11- 17	AE	DJ	N	C	
CFRM-1193DS51	46-501	AQ	EQ	N	E	
CGiDM2106DS51	33-501	AV	FG	N	E	
CGiDM2107DS51	32-501	AZ	FX	N	E	
CGiDM2107DS52	32-501	AU	EZ	N	E	
CGiDM2108DS51	38-503	BG	GT	N	E	
CGiDM2109DS51	37-501	AZ	FQ	N	E	
CGiDM2133DS51	37-502	BF	GN	N	E	
CGiDM2136DS51	53-901	BF	GN	N	E	
CGiDM2137DS51	50- 1	BN	LE	N	E	
CGiDM2151DS51	22- 14	AM	EG	N	C	
CHLDZ1647DS51	24- 2	AY	FQ	N	E	

PARTS CODE	NO.	PRICE R. Ex.	PRICE R. Ja.	NEW	P/R	
CHLDZ1655DS51	20-901	BG	GX	N	E	
CHLDZ1660FC01	46- 9	AG	DX	N	C	
CHLDZ1663FC31	7- 2	BC	GJ	N	E	
CHLDZ1680FC01	23- 9	AD	DJ	N	C	
CPiPP0217DS51	19-501	AP	EQ	N	E	
CPiPP0217DS52	19-502	AP	EQ	N	E	
CPLTM6444DS51	9- 26	AS	EZ	N	C	
CPLTM6493FC01	31- 10	AF	DS	N	C	
CPLTM6501FC01	15- 11	AL	EB	N	C	
CPLTM6502FC01	15- 24	AK	DX	N	C	
CPLTM6503FC01	16- 5	AL	EB	N	C	
CPLTM6507FC01	34- 11	AL	EB	N	C	
CPLTM6520FC01	7- 16	AH	DX	N	C	
CPLTM6526DS51	6- 8	CA	TV	N	E	
CPLTM6528FC01	23- 8	AG	DX	N	B	
CPLTM6533DS51	38-501	AP	EQ	N	E	
CPLTM6533FC01	38- 34	AG	DX	N	C	
CPLTM6535DS51	37-503	AX	FG	N	E	
CPLTM6535FC01	37- 26	AG	DX	N	C	
CPLTM6539FC01	21- 25	AW	FG		C	
CPLTM6541FC01	48- 9	AY	FQ	N	C	
CPLTM6558FC01	58- 14	AN	EQ		C	
CPLTM6568DS51	26-902	AZ	FQ	N	E	
CPLTM6569DS51	45-501	AY	FQ	N	E	
CPLTM6610FC01	14- 1	AE	DJ	N	C	
CPLTM6981FC01	47- 61	AG	DX	N	C	
CPLTP6570FC01	1- 25	AH	DX	N	C	
CPLTP6570FC02	1- 25	AH	DX	N	C	
CPLTP6571FC01	1- 24	AP	EQ	N	C	
CPLTP6571FC02	1- 24	AP	EQ	N	C	
CPLYZ0448FC02	23- 3	AQ	EQ	N	C	
CPNLC0261DS51	5-901	CC	TZ	N	E	
CPNLC0261DS52	5-901	CC	TZ	N	E	
CPNLC0261DS53	5-901	CC	TZ	N	E	
CPNLC0261FC01	5- 4	AX	FG	N	C	
CPNLC0261FC02	5- 4	AW	FG	N	C	
CPNLC0261FC03	5- 4	AX	FG	N	C	
CPWBF0083QSE5	41- 24	AU	EZ		E	
CPWBF1454FCE2	7- 36	BN	FQ		E	
CPWBF1594FCE2	51- 12	AS	EQ		E	
CPWBF1598FCE1	46- 55	AG	DX		E	
CPWBF1658FC31	5- 16	AQ	EQ	N	E	
CPWBF1661FCE1	21- 20	AS	EQ	N	E	
CPWBF1663FC31	44- 11	BD	GN	N	E	
CPWBF1664FC31	44- 11	BF	GN	N	E	
CPWBF1665FC31	44- 11	BE	GN	N	E	
CPWBF1666FC31	47- 5	BG	GT	N	E	
CPWBF1667FC31	47- 5	BH	GX	N	E	
CPWBF1674FC31	21- 21	AL	EB	N	E	
CPWBF1674FC32	23- 40	AG	DX	N	E	
CPWBF1675FC31	44- 15	AT	EZ	N	E	
CPWBF1676FC31	46- 10	AQ	EQ	N	E	
CPWBF1677FC31	5- 26	AY	FQ	N	E	
CPWBF1678FC31	8- 15	BD	GN	N	E	
CPWBN1659FCE1	5- 30	AZ	FX	N	E	
CPWBN1671FC31	34- 5	AY	FQ	N	E	
CPWBX1662DS51	21- 18	BR	LX	N	E	
CPWBX1662DS53	21- 18	BR	LX	N	E	
CPWBX1713DS518	7- 20	CD	UD	N	E	
CPWBX1713DS548	7- 20	CD	UD	N	E	
CPWBX1714FCE1	42- 4	BZ	TF	N	E	
CPWBX1714FCE4	42- 4	BZ	TF	N	E	
CRALM0235FC01	42- 10	AP	EQ	N	C	
CRALM0236FC01	42- 1	AP	EQ	N	C	
CSFTZ2891FC01	24- 31	AF	DS	N	C	
CSFTZ2918DS51	24- 1	AQ	EQ	N	E	
CSFTZ2920DS51	40- 50	AM	EG	N	E	
CSFTZ2921DS51	40- 38	AL	EB	N	C	
CSFTZ2929FC31	10- 7	AU	EZ	N	E	
CSFTZ2935DS51	15-501	AM	EG	N	E	
CSŌU-0200DS52	14-901	BK	HG	N	D	
CSŌU-0203DS51	50-501	BW	RJ	N	E	
CSŌU-0205DS51	50- 2	BH	GX	N	E	
CSŌU-0206DS51	55- 21	BA	FX	N	E	
CSPRD3367FC01	26- 13	AG	DX	N	C	
CSTYM0350FC01	48- 35	AQ	EQ		C	
CSTYM0351FC01	48- 5	AN	EG		C	
CSTYM0353FC01	48- 22	AR	EQ	N	C	
CYŌK-0060DS52	2- 51	AZ	FQ	N	A	
〃	59- 27	AZ	FQ	N	A	

PARTS CODE	NO.	PRICE R. Ex.	PRICE R. Ja.	NEW	P/R	
【D】						
DHAi-3562FCZZ	49- 13	AD	DJ		C	
DHAi-3658FCZZ	7- 43	AE	DS		C	
DHAi-3697FCZ2	49- 9	AV	FG	N	C	
DHAi-3698FCZ1	49- 6	AN	EG	N	C	
DHAi-3699FCZ1	44- 26	AG	DX	N	C	
DHAi-3700FCZ2	49- 7	AZ	FQ	N	C	
DHAi-3701FCZ2	32- 1	AW	FG	N	C	
DHAi-3702FCZ2	32- 8	AC	DJ	N	C	
DHAi-3703FCZ1	32- 5	AD	DJ	N	C	
DHAi-3704FCZZ	33- 11	AD	DJ	N	C	
DHAi-3705FCZ3	49- 1	BB	GD	N	C	
DHAi-3706FCZZ	47- 65	AE	DS	N	C	
DHAi-3709FCZZ	41- 1	AW	FG	N	C	
DHAi-3710FCZZ	46- 17	AQ	EQ		C	
DHAi-3711FCZ1	23- 39	AN	EG	N	C	
DHAi-3713FCZZ	11- 3	AH	DX	N	C	
DHAi-3714FCZZ	11- 3	AH	DX	N	C	
DHAi-3715FCZ2	47- 30	BG	GT	N	C	
DHAi-3716FCZ1	17- 24	AF	DS	N	C	
DHAi-3717FCZ1	20- 7	AN	EG	N	C	
DHAi-3721FCZZ	46- 63	AD	DJ	N	C	
DHAi-3722FCZ2	49- 2	AX	FG	N	C	
DHAi-3724FCZ3	49- 8	BE	GN	N	C	
DHAi-3725FCZZ	46- 60	AG	DS	N	C	
DHAi-3726FCZZ	46- 61	AE	DS	N	C	
DHAi-3728FCZ1	47- 64	AF	DS	N	C	
DHAi-3729FCZ3	34- 7	BA	FX	N	C	
DHAi-3730FCZ1	14- 16	AQ	EZ	N	C	
DHAi-3731FCZZ	35- 20	AG	DS	N	C	
DHAi-3732FCZ1	16- 15	AN	EB	N	C	
DHAi-3733FCZZ	15- 40	AG	DX	N	C	
DHAi-3734FCZ2	35- 16	AE	DJ	N	C	
DHAi-3735FCZ3	14- 30	AG	DX	N	C	
DHAi-3736FCZ2	49- 10	AU	EZ	N	C	
DHAi-3737FCZZ	35- 30	AM	EG	N	C	
DHAi-3738FCZ2	6- 3	BE	GN	N	C	
DHAi-3744FCZZ	6- 36	AF	DS	N	C	
DHAi-3746FCZZ	49- 12	AM	EG	N	C	
DHAi-3747FCZZ	5- 18	AD	DJ	N	C	
DHAi-3748FCZZ	5- 28	AD	DJ	N	C	
DHAi-3749FCZ1	43- 5	AT	FG	N	C	
DHAi-3750FCZZ	43- 6	AR	EQ	N	C	
DHAi-3751FCZ1	6- 10	AR	EQ	N	C	
DHAi-3753FCZ1	49- 5	AT	EZ	N	C	
DHAi-3755FCZZ	44- 16	AH	DX	N	C	
DHAi-3756FCZZ	44- 9	AE	DJ	N	C	
DHAi-3757FCZ1	49- 11	AP	EQ	N	C	
DHAi-3759FCZZ	50- 10	AU	FG	N	C	
DHAi-3760FCZZ	50- 4	AN	EQ	N	C	
DHAi-3761FCZZ	50- 22	AH	DX	N	C	
DHAi-3762FCZZ	55- 34	AK	DX	N	C	
DHAi-3763FCZZ	52- 3	AH	DX	N	C	
DHAi-3764FCZZ	51- 3	AK	DX	N	C	
DHAi-3770FCZ1	49- 4	AV	FG	N	C	
DHAi-3771FCZZ	44- 27	AL	EB	N	C	
DHAi-3772FCZZ	35- 33	AF	DS	N	C	
DHAi-3779FCZ1	32- 1	AW	FG	N	C	
DHAi-3780FCZ1	32- 1	AW	FG	N	C	
DHAi-3781FCZZ	33- 11	AD	DJ	N	C	
DHAi-3782FCZZ	33- 11	AD	DJ	N	C	
DHAi-3813FCZ2	6- 21	AH	DX	N	C	
DHAi-3832FCZ1	46- 62	AG	DS	N	C	
DHAi-3833FCZZ	23- 35	AD	DJ	N	C	
DHAi-3834FCZZ	23- 30	AD	DJ	N	C	
DHAi-3837FCZZ	56- 50	AC	DJ	N	C	
DUNT-7388FCPZ	43- 4	CD	TR	N	E	
DUNT-7428DSZZ	37-901	BV	NU	N	E	
〃	38-901	BV	NU	N	E	
DUNT-7434DS11	1-502	BA	FX	N	E	
DUNT-7434DSZZ	1-502	BB	GD	N	E	
DUNT-7439DS11	6-901	CL	UW	N	E	
〃	7-901	CL	UW	N	E	
DUNT-7439DSZZ	6-901	CL	UW	N	E	
〃	7-901	CL	UW	N	E	
DUNT-7444DS11	22-901	BR	LX	N	E	
〃	23-901	BR	LX	N	E	
DUNT-7444DS12	22-901	BR	LX	N	E	
〃	23-901	BR	LX	N	E	
DUNT-7444DS13	22-901	BR	LX	N	E	
〃	23-901	BR	LX	N	E	

PARTS CODE	NO.	PRICE R. Ex.	PRICE R. Ja.	NEW	P/R	
DUNT-7444DSZZ	22-901	BR	LX	N	E	
〃	23-901	BR	LX	N	E	
DUNT-7445DS12	26-901	BX	TF	N	E	
〃	27-901	BX	TF	N	E	
〃	28-901	BX	TF	N	E	
DUNT-7466DS11	15-901	BP	LP	N	E	
〃	16-901	BP	LP	N	E	
DUNT-7467DS11	29-901	BR	MJ	N	E	
〃	30-901	BR	MJ	N	E	
DUNT-7472DS12	21- 17	CM	UW	N	E	
DUNT-7472DS13	21- 17	CM	UW	N	E	
DUNT-7478DSZZ	58-901	BB	FX	N	E	
DUNT-7479DSZZ	55-501	BG	GT	N	E	
DUNTK0233QSPZ	27- 28	AH	DX		E	
〃	29- 18	AH	DX		E	
DUNTW7441DS11	31-901	CA	TR	N	E	
〃	32-901	CA	TR	N	E	
〃	33-901	CA	TR	N	E	
DUNTW7441DSZZ	31-901	CA	TR	N	E	
〃	32-901	CA	TR	N	E	
〃	33-901	CA	TR	N	E	
【G】						
GCAB-1086FCZZ	34- 31	AP	EQ	N	D	
GCAB-1087FCZZ	34- 26	AT	EZ	N	D	
GCAB-1088FCZZ	35- 19	AP	EQ	N	D	
GCAB-1089FCZZ	13- 10	AV	FG	N	D	
GCAB-1091FCZZ	2- 27	AP	EQ	N	D	
GCAB-1092FCZZ	2- 25	AT	EZ	N	D	
GCAB-1094FCZ1	2- 22	AU	EZ	N	D	
GCAB-1095FCZ1	2- 17	AL	EB	N	D	
GCAB-1095FCZZ	2- 17	AL	EB	N	D	
GCAB-1096FCZZ	2- 13	BC	GJ	N	D	
GCAB-1097FCZZ	2- 4	AK	DX	N	D	
GCAB-1098FCZZ	1- 17	AP	EQ	N	D	
GCAB-1099FCZZ	1- 1	AQ	EQ	N	D	
GCAB-1100FCZZ	4- 12	BP	EZ	N	D	
GCAB-1101FCZ2	2- 8	BC	GD	N	D	
GCAB-1102FCZZ	2- 3	AP	EQ	N	D	
GCAB-1103FCZZ	2- 6	AU	EZ	N	D	
GCAB-1106FCZZ	50- 45	AN	EG	N	D	
GCAB-1107FCZZ	50- 3	AS	EZ	N	D	
GCAB-1114FCZZ	2- 14	BC	GD	N	D	
GCAB-1115FCZZ	2- 12	AC	DJ	N	D	
GCAB-1116FCZZ	2- 9	AS	EQ	N	D	
GCAB-1149FCZZ	2- 20	AQ	EQ	N	D	
GCAB-1154FCZZ	35- 19	AQ	EQ	N	D	
GCASP0177FCZZ	9- 20	BA	FX	N	D	
GCOV-0238FCZZ	9- 3	AH	DX	N	D	
GCOV-0241FCZZ	1- 12	AU	FG	N	D	
GCOV-0242FCZ1	2- 1	AR	EQ	N	D	
GCOV-0243FCZZ	3- 1	AY	FQ	N	D	
GCOV-0244FCZZ	3- 3	BA	FX	N	D	
GCOV-0247FCZZ	3- 2	AS	EQ	N	D	
GCOV-0249FCZZ	50- 46	AF	DS	N	D	
GDOR-0041FCZZ	34- 30	AX	FG	N	D	
GDOR-0042FCZZ	13- 11	AE	DJ	N	D	
GFTA-0026FCZZ	2- 40	AF	DS	N	D	
GFTA-0027FCZZ	2- 19	AG	DS	N	D	
GFTA-0028FCZZ	1- 15	AF	DS	N	D	
GLEGG0079FCZZ	45- 11	AE	DJ	N	D	
〃	46- 21	AE	DJ	N	D	
【H】						
HBDGD0048FCZZ	2- 53	AP	EQ	N	D	
HPNLC0262FCZZ	1- 21	AE	DJ	N	D	
【J】						
JBTN-0277FCZZ	5- 6	AH	DX	N	C	
JBTN-0280FCZZ	36- 22	AC	DJ	N	C	
JHiM-0006FCZZ	38- 33	BA	FX	N	C	
JHNDM0170FCZ1	43- 16	AD	DJ		C	
JHNDM0185FCZZ	45- 6	AG	DX	N	C	
〃	47- 15	AG	DX	N	C	
JHNDP0166FCZZ	25- 3	AC	DJ		C	
JHNDP0174FCZZ	9- 1	AU	FG	N	C	
JHNDP0184FCZZ	17- 15	AU	EZ	N	C	
JKNBZ0148FCZZ	31- 6	AC	DJ	N	C	
JKNBZ0149FCZZ	56- 42	AC	DJ	N	C	
【L】						
LANGT1432FCZZ	36- 38	AG	DX	N	C	
LANGT1434FCZZ	34- 9	AL	EB	N	C	
LBNDC0075FCZZ	59- 30	AB	DJ		C	
LBNDJ0005FCZZ	6- 27	AB	DD		C	

PARTS CODE	NO.	PRICE R. Ex.	PRICE R. Ja.	NEW	P/R	
LBNDJ0020FCZZ	47- 26	AA	DD		C	
LBNDJ0071FCZZ	7- 40	AC	DJ		C	
LBNDZ0077FCZ1	2- 37	AD	DJ	N	C	
LBSHC0096FCZZ	6- 23	AA	DD		C	
LBSHZ0364FCZZ	4- 9	AB	DJ	N	C	
LDAiU0610FCZZ	7- 25	AE	DS		D	
LDAiU0619FCZ1	8- 10	AS	EQ		D	
LDAiU0694FCZZ	18- 24	AV	FG	N	D	
LDAiU0695FCZZ	1- 19	AV	FG	N	D	
LDAiU0696FCZZ	34- 8	AF	DS	N	D	
LDAiU0700FCZZ	36- 29	AZ	FQ	N	D	
LDAiU0704FCZZ	34- 44	AC	DJ	N	D	
LFiX-0016FCZZ	44- 6	AD	DJ		C	
LFiX-0084FCZZ	44- 6	AD	DJ		C	
LFiX-0537FCZZ	7- 24	AD	DJ		C	
LFiX-0545FCZZ	8- 14	AC	DJ		C	
LFiX-0595FCZZ	1- 3	AH	DX	N	C	
LFiX-0596FCZZ	1- 16	AG	DX	N	C	
LFiX-0624FCZZ	1- 3	AK	DX	N	C	
LFiX-0627FCZZ	37- 35	AD	DJ	N	C	
〃	59- 25	AD	DJ	N	C	
LFRM-1148FCZ1	39- 3	AW	FG	N	C	
LFRM-1149FCZZ	27- 16	AS	EZ	N	C	
LFRM-1150FCZZ	28- 24	AY	FQ	N	C	
LFRM-1151FCZZ	21- 4	AL	EB	N	C	
LFRM-1153FCZ1	25- 4	AN	EG	N	C	
LFRM-1154FCZZ	11- 26	AE	DS	N	C	
LFRM-1161FCZZ	11- 17	AE	DS	N	C	
LFRM-1162FCZZ	39- 37	AH	DX	N	C	
LFRM-1164FCZZ	39- 15	AE	DS	N	C	
LFRM-1173FCZ1	32- 23	AN	EG	N	C	
LFRM-1178FCZZ	48- 1	AR	EQ	N	C	
LFRM-1189FCZZ	48- 4	AR	EQ	N	C	
LFRM-1192FCZZ	34- 22	AD	DJ	N	C	
〃	46- 48	AD	DJ	N	C	
LFRM-1193FCZZ	46- 33	AF	DS	N	C	
LFRM-1194FCZZ	30- 10	AL	EB	N	C	
LFRM-1195FCZZ	30- 20	AC	DJ	N	C	
LFRM-1196FCZ1	29- 15	AP	EQ	N	C	
LHLDR1650FCZZ	52- 17	AD	DJ	N	C	
LHLDW0450FCZZ	33- 39	AD	DJ		C	
LHLDW0595FCZZ	6- 17	AC	DD	N	C	
LHLDW0825FCZZ	6- 16	AB	DD		C	
LHLDW1009ACZZ	36- 21	AA	DD		C	
LHLDW1057FCZZ	42- 15	AB	DD	N	C	
LHLDW1152FCZZ	2- 16	AC	DJ		C	
LHLDW1154FCZZ	44- 24	AC	DJ		C	
LHLDW1155FCZZ	44- 19	AC	DJ		C	
LHLDW1226FCZZ	59- 21	AB	DJ		C	
〃	9- 36	AB	DJ		C	
LHLDW1263FCZZ	37- 27	AC	DJ		C	
〃	38- 27	AC	DJ		C	
LHLDW1264FCZZ	42- 12	AD	DJ		C	
〃	44- 18	AD	DJ		C	
〃	47- 8	AD	DJ		C	
LHLDW1285FCZZ	47- 59	AC	DJ		C	
LHLDW1334FCZZ	44- 25	AA	DJ		C	
LHLDW1491FCZZ	56- 51	AG	DS		C	
LHLDW1600FCZZ	43- 10	AC	DJ		C	
LHLDW1757FCPZ	42- 16	AC	DJ	N	C	
LHLDW2048SCZZ	41- 34	AB	DD		C	
LHLDW7005SCZZ	44- 5	AB	DD		C	
LHLDW7008XCZZ	45- 9	AB	DD		C	
〃	48- 37	AB	DD		C	
LHLDW7027SCZZ	44- 22	AB	DD		C	
LHLDZ1085FCZ3	4- 8	AE	DJ	N	C	
LHLDZ1381FCZZ	7- 35	AL	EB		C	
LHLDZ1464FCZZ	46- 57	AG	DX		C	
LHLDZ1469FCZZ	34- 39	AE	DJ		C	
LHLDZ1505FCZZ	7- 5	AC	DJ		C	
LHLDZ1540FCZZ	50- 24	AG	DS		C	
LHLDZ1554FCZZ	40- 52	AE	DJ		C	
LHLDZ1618FCZZ	9- 34	AC	DJ	N	C	
LHLDZ1619FCZ1	33- 26	AH	DX	N	C	
LHLDZ1627FCZZ	40- 1	AD	DJ	N	C	
LHLDZ1630FCZZ	15- 36	AC	DJ	N	C	
LHLDZ1631FCZZ	14- 27	AD	DJ	N	C	
LHLDZ1637FCZZ	11- 28	AS	EQ	N	C	
LHLDZ1638FCZZ	13- 19	AC	DJ	N	C	
LHLDZ1639FCZZ	13- 8	AC	DJ	N	C	
LHLDZ1640FCZZ	50- 43	AC	DJ	N	C	

PARTS CODE	NO.	PRICE R. Ex.	PRICE R. Ja.	NEW	P/R	
LHLDZ1641FCZZ	56- 11	AC	DJ	N	C	
〃	58- 27	AC	DJ	N	C	
LHLDZ1642FCZZ	23- 28	AC	DJ	N	C	
LHLDZ1643FCZZ	23- 44	AC	DJ	N	C	
LHLDZ1645FCZZ	5- 22	AK	DX	N	C	
LHLDZ1646FCZZ	5- 25	AH	DX	N	C	
LHLDZ1648FCZZ	56- 49	AD	DJ		C	
LHLDZ1649FCZZ	56- 5	AD	DJ		C	
LHLDZ1651FCZZ	56- 32	AC	DJ	N	C	
LHLDZ1652FCZZ	46- 1	AF	DS	N	C	
LHLDZ1653FCZZ	46- 40	AL	EB	N	C	
LHLDZ1655FCZZ	20- 1	AM	EG	N	C	
LHLDZ1662FCZZ	33- 1	AB	DJ	N	C	
LHLDZ1664FCZZ	32- 35	AC	DJ	N	C	
LHLDZ1666FCZZ	35- 26	AC	DJ	N	C	
LHLDZ1667FCZ1	19- 4	AD	DJ	N	C	
LHLDZ1668FCZ1	19- 4	AD	DJ	N	C	
LHLDZ1669FCZZ	22- 2	AD	DJ	N	C	
LHLDZ1670FCZZ	53- 15	AC	DJ		C	
LHLDZ1676FCZ1	41- 32	AP	EQ	N	C	
LHLDZ1678FCZZ	11- 9	AB	DJ	N	C	
LHLDZ1679FCZZ	11- 31	AC	DJ	N	C	
〃	17- 16	AC	DJ	N	C	
〃	36- 26	AC	DJ	N	C	
LHLDZ1681FCZZ	47- 3	AG	DX	N	C	
LHLDZ1683FCZZ	34- 46	AC	DJ	N	C	
LHLDZ1684FCZZ	34- 34	AC	DJ	N	C	
LHLDZ1712FCZZ	2- 46	AC	DJ	N	C	
LHLDZ1713FCZZ	2- 49	AC	DJ	N	C	
LHLDZ1715FCZZ	37- 36	AE	DJ	N	C	
〃	59- 25	AE	DJ	N	C	
LHLDZ1755FCZZ	52- 38	AC	DJ	N	C	
LPiNS0089FCZZ	15- 45	AA	DD		C	
〃	52- 6	AA	DD		C	
〃	53- 12	AA	DD		C	
〃	56- 2	AA	DD		C	
LPiNS0133FCZZ	11- 13	AA	DD		C	
〃	12- 3	AA	DD		C	
〃	15- 12	AA	DD		C	
〃	23- 21	AA	DD		C	
〃	34- 35	AA	DD		C	
〃	36- 16	AA	DD		C	
〃	38- 6	AA	DD		C	
〃	39- 2	AA	DD		C	
〃	40- 31	AA	DD		C	
LPiNS0155FCZZ	15- 2	AA	DD		C	
〃	18- 28	AA	DD		C	
〃	26- 4	AA	DD		C	
〃	27- 19	AA	DD		C	
〃	29- 10	AA	DD		C	
〃	40- 55	AA	DD		C	
LPiNS0258FCZZ	37- 9	AA	DD		C	
LPiNS0278FCZZ	40- 27	AB	DJ		C	
〃	41- 8	AB	DJ		C	
LPiNS0330FCZZ	16- 14	AB	DJ		C	
LPiNS0333FCZZ	15- 32	AB	DJ	N	C	
LPiNS0334FCZZ	15- 34	AB	DJ		C	
LPiNS0337FCZZ	17- 21	AB	DJ		C	
〃	18- 8	AB	DJ		C	
〃	39- 5	AB	DJ		C	
〃	40- 44	AB	DJ		C	
〃	41- 35	AB	DJ		C	
LPiNS0346FCZZ	3- 5	AE	DS	N	C	
LPLTM5027FCZZ	2- 38	AC	DJ		C	
LPLTM5714FCZZ	22- 18	AB	DJ		C	
〃	23- 18	AB	DJ		C	
〃	30- 12	AB	DJ		C	
〃	46- 39	AB	DJ		C	
〃	48- 18	AB	DJ		C	
LPLTM6089FCZZ	48- 28	AK	DX		C	
LPLTM6441FCZ1	23- 37	AN	EQ	N	C	
LPLTM6442FCZZ	23- 41	AS	EQ	N	C	
LPLTM6443FCZZ	9- 5	AS	EQ	N	C	
LPLTM6445FCZZ	9- 13	AB	DJ	N	C	
LPLTM6492FCZZ	56- 24	AC	DJ		C	
LPLTM6495FCZZ	6- 20	AC	DJ	N	C	
LPLTM6499FCZZ	15- 44	AM	EG	N	C	
LPLTM6506FCZZ	36- 34	AK	DX	N	C	
LPLTM6508FCZZ	35- 34	AC	DJ	N	C	
LPLTM6512FCZZ	21- 14	AC	DJ	N	C	
LPLTM6513FCZZ	21- 13	AC	DJ	N	C	

PARTS CODE	NO.	PRICE R. Ex.	PRICE R. Ja.	NEW	P/R	
LPLTM6514FCZZ	11- 1	AN	EQ	N	C	
LPLTM6515FCZZ	10- 17	AH	DX	N	C	
LPLTM6516FCZZ	12- 15	AC	DJ	N	C	
LPLTM6517FCZZ	18- 17	AF	DS	N	C	
LPLTM6518FCZZ	18- 18	AC	DJ	N	C	
LPLTM6522FCZZ	6- 19	AK	DX	N	C	
LPLTM6523FCZZ	6- 18	AF	DS	N	C	
LPLTM6524FCZZ	7- 22	AK	EB	N	C	
LPLTM6527FCZZ	23- 29	AC	DJ	N	C	
LPLTM6529FCZZ	21- 1	AM	EG		C	
LPLTM6530FCZZ	45- 10	AD	DJ	N	C	
LPLTM6532FCZZ	48- 40	AL	EB		C	
LPLTM6534FCZZ	38- 7	AB	DJ	N	C	
LPLTM6538FCZZ	21- 27	AS	EQ	N	C	
LPLTM6542FCZZ	48- 16	AD	DJ	N	C	
LPLTM6543FCZZ	45- 5	AD	DJ		C	
〃	47- 18	AD	DJ		C	
LPLTM6553FCZZ	50- 16	AM	EG		C	
LPLTM6554FCZZ	50- 32	AC	DJ		C	
LPLTM6555FCZ1	56- 3	AN	EG	N	C	
LPLTM6556FCZZ	55- 29	AC	DJ		C	
LPLTM6557FCZZ	53- 18	AH	DX	N	D	
LPLTM6565FCZZ	25- 20	AG	DX	N	C	
LPLTM6566FCZZ	28- 23	AD	DJ	N	C	
LPLTM6568FCZZ	26- 43	AP	EQ	N	C	
LPLTM6569FCZZ	45- 24	AG	DS	N	C	
LPLTM6575FCZZ	48- 20	AE	DJ		C	
LPLTM6577FCZZ	48- 6	AG	DS		C	
LPLTM6580FCZZ	48- 25	AL	EB	N	C	
LPLTM6583FCZZ	47- 1	AG	DS		C	
LPLTM6584FCZZ	47- 10	AD	DJ		C	
LPLTM6585FCZZ	47- 35	AL	EB	N	C	
LPLTM6589FCZZ	47- 29	AE	DS		C	
LPLTM6590FCZZ	44- 17	AQ	EQ	N	C	
LPLTM6591FCZZ	47- 41	AG	DX		C	
LPLTM6592FCZZ	43- 2	AF	DS	N	C	
LPLTM6593FCZZ	47- 11	AF	DS	N	C	
LPLTM6594FCZZ	44- 1	AL	EB	N	C	
LPLTM6595FCZZ	42- 3	AR	EQ		C	
LPLTM6596FCZZ	45- 8	AD	DJ	N	C	
LPLTM6597FCZ1	48- 17	AH	DX	N	C	
LPLTM6600FCZZ	43- 3	AF	DS	N	C	
LPLTM6601FCZZ	47- 45	AM	EG		C	
LPLTM6603FCZZ	47- 21	AG	DS	N	C	
LPLTM6604FCZZ	48- 8	AH	DX	N	C	
LPLTM6606FCZZ	47- 4	AP	EQ	N	C	
LPLTM6668FCZZ	6- 11	AE	DJ	N	C	
LPLTM6766FCZZ	22- 11	AD	DJ	N	C	
LPLTP0131QSZZ	56- 48	AD	DJ		C	
LPLTP0321QSZZ	51- 14	AE	DS		C	
LPLTP5827FCZZ	11- 21	AF	DS		C	
〃	15- 19	AF	DS		C	
〃	16- 18	AF	DS		C	
〃	35- 13	AF	DS		C	
LPLTP6436FCZ1	9- 10	AN	EQ	N	C	
LPLTP6437FCZZ	9- 33	AQ	EQ	N	C	
LPLTP6439FCZZ	9- 6	AE	DS	N	C	
LPLTP6440FCZZ	9- 16	AD	DJ	N	C	
LPLTP6480FCZZ	34- 32	AB	DJ	N	C	
LPLTP6483FCZZ	14- 17	AF	DS	N	C	
LPLTP6484FCZZ	10- 15	AC	DJ	N	C	
LPLTP6485FCZZ	51- 1	AG	DX	N	C	
LPLTP6486FCZZ	51- 2	AG	DX	N	C	
LPLTP6487FCZZ	20- 10	AG	DS	N	C	
LPLTP6488FCZZ	20- 2	AB	DJ	N	C	
LPLTP6711FCZ1	27- 36	AC	DJ	N	C	
LPLTP6762FCZZ	37- 20	AC	DJ	N	C	
LRALM0225FCZZ	7- 33	AG	DS	N	A	
LRALM0226FCZZ	7- 34	AE	DS	N	A	
LRALM0229FCZZ	48- 11	AL	EB	N	C	
LRALM0230FCZZ	48- 24	AN	EG	N	C	
LRALM0234FCZZ	45- 1	BA	FX	N	C	
〃	47- 19	BA	FX	N	C	
LRALM0237FCZZ	21- 30	AG	DX	N	C	
LRALP0231FCZZ	48- 19	AM	EG	N	C	
LRALP0232FCZZ	48- 41	AF	DS	N	C	
LRTNP0015FCPZ	32- 40	AD	DJ	N	C	
〃	49- 15	AD	DJ	N	C	
LSŌU-0177FCP5	59- 15	AQ	EQ	N	D	
LSŌU-0179FCP5	59- 15	AV	FG	N	D	
LSŌU-0199FCZZ	14- 7	AR	EQ	N	D	

PARTS CODE	NO.	PRICE R. Ex.	PRICE R. Ja.	NEW	P/R	
LSŌU-0200FCZZ	14- 25	AX	FG	N	D	
LSŌU-0201FCZZ	14- 26	AN	EQ	N	D	
LSŌU-0202FCZZ	14- 31	AL	EB	N	D	
LSŌU-0203FCZ1	50- 15	BG	GT	N	D	
LSŌU-0204FCZZ	51- 5	AV	FG	N	D	
LSŌU-0205FCZZ	51- 6	AU	EZ	N	D	
LSŌU-0206FCZZ	57- 1	AR	EQ	N	D	
LSTPF0172FCZ1	32- 29	AA	DJ		C	
LSTPP0016QSZZ	58- 6	AC	DJ		C	
LSTPP0275FCZZ	13- 3	AE	DS		C	
LSTPP0375FCZZ	15- 43	AM	EG		C	
LSTPP0384FCZZ	21- 24	AB	DJ	N	C	
LSTYM0260FCZZ	18- 21	AK	EB		C	
LSTYM0261FCZZ	8- 9	AB	DJ		C	
LSTYM0346FCZZ	35- 35	AH	DX	N	C	
LSTYM0349FCZZ	17- 1	AH	DX	N	C	
LSTYM0352FCZ1	33- 16	AK	DX	N	C	
LSTYM0354FCZZ	21- 29	AP	EQ	N	C	
LSTYM0355FCZZ	48- 7	AQ	EQ		C	
LSTYM0360FCZZ	20- 11	AK	DX	N	C	
LSUPP0011FCZZ	39- 45	AB	DD		C	
LSUPP0118FCZZ	44- 14	AB	DJ		C	
LX-BZ0004QSPZ	7- 41	AB	DD		C	
LX-BZ0026GCZ1	33- 41	AC	DD		C	
LX-BZ0045QSZZ	22- 30	AC	DD	N	C	
LX-BZ0046QSPZ	31- 3	AA	DD		C	
〃	32- 9	AA	DD		C	
〃	33- 2	AA	DD		C	
LX-BZ0049FCPZ	7- 9	AB	DD		C	
LX-BZ0067QSPZ	31- 7	AB	DD	N	C	
LX-BZ0324FCPZ	7- 38	AA	DD		C	
LX-BZ0335FCPZ	48- 10	AB	DD		C	
LX-BZ0342FCPZ	18- 27	AB	DD	N	C	
LX-BZ0465FCZZ	26- 47	AA	DD		C	
LX-BZ0531FCPZ	50- 21	AB	DD	N	C	
〃	9- 35	AB	DD	N	C	
LX-BZ0589FCP1	18- 1	AA	DD	N	C	
LX-BZ0656FCP1	22- 28	AD	DJ	N	C	
LX-BZ0670FCP1	40- 53	AC	DD	N	C	
LX-BZ0676FCZZ	27- 35	AA	DD		C	
LX-BZ0705FCPZ	47- 58	AC	DD		C	
LX-BZ0714FCPZ	35- 6	AC	DD	N	C	
〃	36- 12	AC	DD	N	C	
LX-BZ0736FCPZ	15- 48	AC	DD	N	C	
〃	31- 9	AC	DD	N	C	
〃	34- 49	AC	DD	N	C	
LX-BZ0747FCZZ	2- 48	AB	DD		C	
LX-BZ0776FCPZ	1- 14	AG	DD	N	C	
LX-BZ0787FCPZ	59- 9	AD	DD	N	C	
LX-BZ0833FCPZ	56- 10	AC	DD		C	
〃	58- 26	AC	DD		C	
LX-BZ0850FCPZ	45- 21	AC	DD	N	C	
LX-BZ0858FCZZ	25- 22	AA	DD		C	
〃	26- 2	AA	DD		C	
LX-BZ0862FCPZ	34- 10	AC	DD	N	C	
LX-BZ0881FCZZ	48- 23	AC	DD		C	
LX-BZ0882FCPZ	31- 15	AD	DD	N	C	
LX-BZ0884FCPZ	14- 19	AB	DD	N	C	
〃	36- 5	AB	DD	N	C	
LX-BZ0901FCPZ	41- 2	AC	DD	N	C	
LX-BZ0905FCPZ	32- 2	AB	DD	N	C	
LX-BZ0922FCPZ	49- 14	AC	DD	N	C	
LX-BZ0926FCP1	48- 13	AC	DD	N	C	
LX-BZ0930FCPZ	50- 44	AC	DD	N	C	
LX-BZ0932FCPZ	47- 27	AC	DD	N	C	
LX-BZ0959FCPZ	48- 26	AC	DD	N	C	
LX-BZ0980FCPZ	29- 14	AA	DD	N	C	
LX-BZ0986FCZ1	43- 15	AF	DS		C	
LX-BZ0987FCZZ	46- 65	AC	DD		C	
LX-BZ1004FCZZ	28- 21	AC	DD	N	C	
LX-BZ1005FCZZ	26- 16	AC	DD	N	C	
LX-BZ1007FCZZ	26- 30	AD	DJ	N	C	
LX-BZ1012FCZZ	27- 12	AB	DD	N	C	
〃	28- 20	AB	DD	N	C	
LX-BZ1013FCZZ	45- 12	AC	DD	N	C	
〃	46- 22	AC	DD	N	C	
LX-BZ1016FCZZ	24- 12	AB	DD	N	C	
LX-BZ1022LCZZ	43- 8	AB	DD	N	C	
LX-BZ1023FCZZ	9- 28	AD	DJ	N	C	
LX-BZ1024FCZZ	1- 10	AG	DX	N	C	
LX-BZ1027FCZZ	47- 60	AC	DD	N	C	

PARTS CODE	NO.	PRICE R. Ex.	PRICE R. Ja.	NEW	P/R	
LX-BZ1028FCZZ	50- 11	AC	DD	N	C	
LX-BZ1030FCZZ	32- 14	AB	DD	N	C	
〃	33- 36	AB	DD	N	C	
LX-BZ1031FCZZ	33- 22	AB	DD	N	C	
LX-BZ1033FCZZ	26- 38	AA	DD	N	C	
LX-BZ1037FCZZ	22- 20	AD	DJ	N	C	
LX-BZ1039FCZZ	21- 11	AC	DD	N	C	
LX-BZ1046FCZZ	46- 38	AC	DD		C	
〃	48- 34	AC	DD		C	
LX-BZ1053FCZZ	40- 58	AC	DD	N	C	
LX-BZ1057FCZZ	43- 9	AC	DD	N	C	
LX-BZ3006SCPS	32- 20	AA	DD	N	C	
〃	33- 27	AA	DD	N	C	
LX-BZ3008SCPM	13- 15	AA	DD		C	
LX-HZ0002QSPZ	47- 23	AC	DD		C	
LX-WZ0017FCPZ	18- 16	AA	DD	N	C	
LX-WZ0096FCZZ	43- 17	AA	DD		C	
LX-WZ0326FCPZ	59- 10	AC	DD	N	C	
LX-WZ0421FCZZ	27- 33	AA	DD		C	
〃	28- 34	AA	DD		C	
LX-WZ0443FCPZ	44- 2	AB	DD	N	C	
〃	52- 26	AB	DD	N	C	
LX-WZ0454FCZZ	40- 59	AD	DD	N	C	
LX-WZ2011SCZZ	29- 21	AA	DD		C	
〃	40- 60	AA	DD		C	
LX-WZ5002BCZZ	54- 24	AA	DD		C	
【M】						
MARMP0147FCZ3	4- 10	AK	DX	N	C	
MARMP0148FCZ3	4- 5	AK	DX	N	C	
MARMP0322FCZZ	14- 3	AC	DJ	N	C	
MARMP0324FCZZ	52- 11	AB	DJ	N	C	
MARMP0325FCZZ	50- 50	AC	DJ	N	C	
MARMP0327FCZZ	15- 39	AC	DJ	N	C	
MARMP0328FCZZ	16- 12	AD	DJ	N	C	
MARMP0329FCZZ	16- 24	AD	DJ	N	C	
MARMP0330FCZZ	52- 13	AC	DJ	N	C	
MARMP0337FCZZ	28- 22	AC	DJ	N	C	
MARMP0338FCZZ	21- 28	AE	DS	N	C	
MARMP0339FCZZ	52- 12	AC	DJ	N	C	
MARMP0343FCZZ	46- 30	AC	DJ	N	C	
MARMP0344FCZZ	34- 18	AC	DJ	N	C	
MCAMP0111FCZZ	26- 11	AC	DJ	N	C	
MCAMP0115FCZZ	26- 6	AC	DJ	N	C	
MCAMP0116FCZZ	26- 19	AC	DJ	N	C	
MCAMP0118FCZZ	2- 45	AC	DJ	N	C	
MHNG-0218FCZZ	3- 4	AD	DJ		C	
MHNG-0220FCZZ	2- 32	AG	DX	N	C	
MHNG-0221FCZZ	3- 9	AT	EZ	N	C	
MHNG-0222FCZZ	3- 11	AT	EZ	N	C	
MJNTP0030FCZZ	40- 14	AB	DJ	N	C	
MLEVF0968FCZZ	33- 25	AC	DJ	N	C	
MLEVF0969FCZZ	33- 5	AC	DJ	N	C	
MLEVP0098QSZZ	51- 20	AC	DJ		C	
MLEVP0923FCZZ	9- 21	AC	DJ	N	C	
MLEVP0929FCZZ	14- 29	AC	DJ	N	C	
MLEVP0930FCZZ	50- 29	AC	DJ	N	C	
〃	55- 37	AC	DJ	N	C	
MLEVP0931FCZZ	55- 36	AC	DJ	N	C	
MLEVP0932FCZZ	52- 32	AC	DJ	N	C	
MLEVP0933FCZZ	38- 24	AC	DJ	N	C	
MLEVP0936FCZZ	45- 22	AB	DJ	N	C	
MLEVP0937FCZZ	26- 21	AD	DJ	N	C	
MLEVP0938FCZZ	16- 1	AC	DJ	N	C	
MLEVP0939FCZZ	16- 8	AD	DJ	N	C	
MLEVP0941FCZZ	35- 24	AC	DJ	N	C	
MLEVP0944FCZ1	34- 48	AE	DJ	N	C	
MLEVP0946FCZZ	35- 18	AC	DJ	N	C	
MLEVP0947FCZZ	11- 19	AD	DJ	N	C	
MLEVP0949FCZZ	11- 23	AC	DJ	N	C	
MLEVP0950FCZZ	13- 4	AE	DS	N	C	
MLEVP0951FCZZ	11- 32	AC	DJ	N	C	
〃	17- 18	AC	DJ	N	C	
〃	36- 27	AC	DJ	N	C	
MLEVP0953FCZZ	52- 33	AC	DJ		C	
MLEVP0955FCZ1	33- 24	AD	DJ	N	C	
MLEVP0956FCZ1	33- 4	AD	DJ	N	C	
MLEVP0957FCZZ	31- 2	AD	DJ	N	C	
MLEVP0958FCZZ	38- 12	AD	DJ	N	C	
MLEVP0959FCZZ	38- 10	AD	DJ	N	C	
MLEVP0960FCZZ	37- 5	AC	DJ	N	C	
MLEVP0961FCZZ	37- 4	AD	DJ	N	C	

PARTS CODE	NO.	PRICE R. Ex.	PRICE R. Ja.	NEW	P/R	
MLEVP0962FCZZ	24- 29	AC	DJ	N	C	
MLEVP0963FCZZ	55- 20	AC	DJ	N	C	
MLEVP0964FCZZ	26- 42	AC	DJ	N	C	
MLEVP0965FCZZ	45- 30	AC	DJ	N	C	
MLEVP0966FCZZ	26- 22	AE	DJ	N	C	
MLEVP0972FCZZ	56- 44	AB	DJ	N	C	
MLEVP0974FCZZ	55- 25	AD	DJ	N	C	
MLEVP1034FCZZ	52- 44	AC	DJ	N	C	
MLNKP0030FCZZ	27- 5	AC	DJ	N	C	
MLNKP0031FCZZ	27- 2	AC	DJ	N	C	
MLNKP0032FCZZ	28- 17	AE	DJ	N	C	
MLNKP0033FCZZ	28- 8	AE	DJ	N	C	
MLNKP0034FCZZ	27- 22	AC	DJ	N	C	
MLNKP0035FCZZ	46- 7	AC	DJ	N	C	
MLŌKZ0011FCZZ	46- 23	AC	DJ	N	C	
MLŌKZ0012FCZZ	14- 23	AC	DJ	N	C	
〃	34- 28	AC	DJ	N	C	
MSLi-0138FCZZ	8- 7	AC	DJ		C	
MSLiP0147FCZZ	15- 22	AC	DJ	N	C	
MSLiP0148FCZZ	15- 14	AC	DJ	N	C	
MSPRC0153QSZZ	56- 45	AB	DJ		C	
MSPRC2894FCZZ	46- 56	AC	DJ		C	
MSPRC2907FCZ1	39- 41	AC	DJ		C	
MSPRC3059FCZZ	32- 28	AC	DJ		C	
〃	33- 9	AC	DJ		C	
MSPRC3267FCZ1	47- 28	AC	DJ		C	
MSPRC3345FCZZ	27- 21	AB	DJ	N	C	
MSPRC3346FCZ2	28- 4	AB	DJ	N	C	
MSPRC3347FCZZ	27- 1	AD	DJ	N	C	
MSPRC3352FCZZ	50- 38	AB	DJ		C	
〃	51- 11	AB	DJ		C	
MSPRC3353FCZZ	55- 27	AB	DJ		C	
MSPRC3355FCZZ	53- 9	AB	DJ		C	
MSPRC3356FCZZ	56- 34	AA	DJ		C	
MSPRC3357FCZZ	54- 2	AA	DJ		C	
MSPRC3358FCZZ	57- 2	AA	DJ		C	
MSPRC3359FCZZ	24- 38	AA	DJ	N	C	
〃	25- 10	AA	DJ	N	C	
MSPRC3360FCZZ	24- 30	AA	DJ	N	C	
MSPRC3362FCZZ	45- 20	AC	DJ	N	C	
MSPRC3363FCZZ	26- 20	AC	DJ	N	C	
MSPRC3364FCZZ	22- 8	AA	DJ	N	C	
MSPRC3366FCZZ	40- 39	AB	DJ	N	C	
MSPRC3396FCZZ	40- 10	AB	DJ	N	C	
MSPRC3397FCZ1	19- 6	AA	DJ	N	C	
MSPRC3398FCZZ	10- 11	AC	DJ	N	C	
MSPRC3399FCZZ	10- 14	AC	DJ	N	C	
MSPRC3400FCZZ	9- 18	AC	DJ	N	C	
MSPRC3401FCZZ	13- 13	AB	DJ	N	C	
MSPRC3402FCZZ	13- 9	AC	DJ	N	C	
MSPRC3403FCZZ	17- 5	AB	DJ	N	C	
MSPRC3404FCZZ	17- 10	AC	DJ	N	C	
MSPRC3405FCZZ	18- 3	AB	DJ	N	C	
MSPRC3407FCZZ	15- 15	AC	DJ	N	C	
MSPRC3408FCZZ	15- 46	AC	DJ	N	C	
MSPRC3410FCZZ	15- 27	AC	DJ	N	C	
〃	36- 4	AC	DJ	N	C	
MSPRC3411FCZZ	35- 21	AA	DJ	N	C	
MSPRC3413FCZZ	14- 24	AB	DJ	N	C	
〃	34- 29	AB	DJ	N	C	
MSPRC3414FCZZ	35- 8	AC	DJ	N	C	
MSPRC3415FCZZ	35- 11	AC	DJ	N	C	
MSPRC3416FCZZ	35- 12	AC	DJ	N	C	
MSPRC3417FCZZ	36- 9	AC	DJ	N	C	
MSPRC3449FCZZ	30- 18	AB	DJ	N	C	
MSPRC3451FCZZ	30- 13	AB	DJ	N	C	
MSPRC3452FCZZ	34- 42	AC	DJ	N	C	
MSPRC3453FCZZ	56- 4	AB	DJ		C	
MSPRC3455FCZZ	36- 23	AB	DJ	N	C	
MSPRC3456FCZZ	32- 16	AB	DJ	N	C	
MSPRC3460FCZZ	33- 6	AD	DJ	N	C	
MSPRC3464FCZZ	37- 3	AB	DJ	N	C	
MSPRC3468FCZZ	34- 43	AC	DJ	N	C	
MSPRC3469FCZZ	34- 33	AB	DJ	N	C	
MSPRC3493FCZZ	19- 13	AA	DJ	N	C	
MSPRC3507FCZZ	2- 44	AC	DJ	N	C	
MSPRC3530FCZZ	22- 4	AB	DJ	N	C	
MSPRC3571FCZZ	52- 39	AB	DJ	N	C	
MSPRD3058FCZZ	33- 13	AC	DJ		C	
MSPRD3368FCZZ	28- 28	AE	DS	N	C	
MSPRD3369FCZZ	28- 29	AE	DJ	N	C	

PARTS CODE	NO.	PRICE R. Ex.	PRICE R. Ja.	NEW	P/R	
MSPRD3370FCZZ	28- 30	AE	DJ	N	C	
MSPRD3371FCZZ	27- 29	AC	DJ	N	C	
MSPRD3375FCZZ	50- 30	AB	DJ		C	
〃	55- 38	AB	DJ		C	
MSPRD3376FCZZ	55- 35	AB	DJ		C	
MSPRD3377FCZZ	55- 26	AB	DJ		C	
MSPRD3378FCZZ	52- 31	AB	DJ		C	
MSPRD3380FCZ1	55- 19	AB	DJ	N	C	
MSPRD3383FCZZ	20- 9	AB	DJ	N	C	
MSPRD3384FCZZ	46- 14	AC	DJ	N	C	
MSPRD3385FCZZ	46- 12	AD	DJ	N	C	
MSPRD3386FCZZ	46- 13	AD	DJ	N	C	
MSPRD3394FCZZ	21- 5	AA	DJ	N	C	
MSPRD3395FCZZ	21- 8	AC	DJ	N	C	
MSPRD3418FCZZ	9- 27	AF	DS	N	C	
MSPRD3419FCZZ	9- 22	AB	DJ	N	C	
MSPRD3420FCZZ	11- 33	AB	DJ	N	C	
〃	17- 19	AB	DJ	N	C	
〃	36- 28	AB	DJ	N	C	
MSPRD3421FCZZ	16- 2	AB	DJ	N	C	
MSPRD3422FCZZ	15- 41	AC	DJ	N	C	
MSPRD3423FCZZ	16- 9	AB	DJ	N	C	
MSPRD3424FCZ1	46- 46	AC	DJ		C	
MSPRD3425FCZ1	35- 25	AC	DJ		C	
MSPRD3426FCZZ	34- 38	AD	DJ	N	C	
MSPRD3427FCZZ	35- 17	AC	DJ	N	C	
MSPRD3429FCZZ	35- 3	AB	DJ	N	C	
MSPRD3450FCZZ	30- 4	AE	DJ	N	C	
MSPRD3461FCZZ	38- 11	AB	DJ	N	C	
MSPRD3462FCZZ	38- 23	AB	DJ	N	C	
MSPRD3574FCZZ	26- 46	AB	DJ	N	C	
MSPRD3575FCZZ	28- 33	AB	DJ	N	C	
MSPRD3576FCZZ	28- 32	AB	DJ	N	C	
MSPRP0315QSZZ	51- 19	AD	DJ		C	
MSPRP2825FCZZ	8- 4	AC	DJ		C	
MSPRP3009FCZZ	5- 29	AD	DJ		C	
MSPRP3331FCZZ	14- 18	AB	DJ	N	C	
MSPRP3337FCZZ	41- 31	AC	DJ	N	C	
MSPRT0229GCAZ	38- 45	AC	DJ		C	
MSPRT1563FCZZ	4- 3	AC	DD		C	
MSPRT2973FCZZ	10- 16	AD	DJ		C	
MSPRT3063FCZZ	38- 31	AC	DJ		C	
MSPRT3388FCZZ	7- 15	AC	DJ	N	C	
MSPRT3389FCZZ	27- 6	AB	DJ	N	C	
〃	28- 6	AB	DJ	N	C	
MSPRT3390FCZZ	50- 47	AC	DJ		C	
MSPRT3391FCZZ	53- 16	AB	DJ		C	
MSPRT3392FCZZ	56- 12	AB	DJ		C	
〃	58- 28	AB	DJ		C	
MSPRT3393FCZZ	21- 7	AB	DJ	N	C	
MSPRT3430FCZZ	11- 18	AC	DJ	N	C	
MSPRT3431FCZZ	10- 19	AC	DJ	N	C	
MSPRT3432FCZZ	17- 14	AC	DJ	N	C	
MSPRT3433FCZ1	34- 24	AB	DJ	N	C	
MSPRT3434FCZZ	34- 17	AB	DJ	N	C	
MSPRT3435FCZZ	16- 13	AC	DJ	N	C	
MSPRT3436FCZZ	16- 22	AC	DJ	N	C	
MSPRT3437FCZZ	36- 6	AC	DJ	N	C	
MSPRT3438FCZZ	46- 32	AA	DJ	N	C	
MSPRT3454FCZZ	45- 33	AB	DJ	N	C	
MSPRT3457FCZZ	32- 12	AA	DJ	N	C	
MSPRT3463FCZZ	38- 35	AC	DJ	N	C	
MSPRT3570FCZZ	58- 34	AC	DJ	N	C	
【N】						
NBLTH0412FCZZ	11- 39	AE	DJ		B	
NBLTH0434FCZZ	26- 3	BF	GN	N	A	
NBLTH0435FCZZ	56- 19	AS	EQ	N	B	
NBLTH0436FCZZ	58- 22	AD	DJ		B	
NBLTH0437FCZZ	58- 16	AS	EQ	N	B	
NBLTH0438FCZZ	56- 27	AS	EQ	N	B	
NBLTH0440FCZZ	7- 8	AS	EQ	N	B	
NBLTH0441FCZZ	56- 40	AD	DJ		B	
NBLTH0442FCZZ	52- 20	AD	DJ		B	
NBLTH0443FCZZ	58- 9	AE	DJ		B	
NBLTH0444FCZZ	54- 12	AS	EQ	N	B	
NBLTH0445FCZ1	23- 10	AD	DJ	N	B	
NBLTH0446FCZZ	40- 36	AU	EZ	N	B	
NBLTH0447FCZZ	40- 45	AU	EZ	N	B	
NBLTH0448FCZZ	40- 46	AX	FG	N	B	
NBLTH0449FCZZ	40- 48	AU	EZ	N	B	
NBLTH0450FCZZ	12- 16	AQ	EQ	N	B	

PARTS CODE	NO.	PRICE R. Ex.	PRICE R. Ja.	NEW	P/R	
NBLTH0451FCZZ	39- 14	AQ	EQ	N	B	
NBLTH0452FCZZ	12- 1	AQ	EQ	N	B	
NBLTH0453FCZZ	16- 32	AQ	EQ	N	B	
NBLTH0454FCZZ	39- 35	AU	EZ	N	B	
NBLTH0455FCZZ	38- 28	AQ	EQ	N	B	
〃	46- 26	AQ	EQ	N	B	
NBLTH0456FCZZ	36- 11	AS	EQ	N	B	
NBLTH0457FCZZ	36- 36	AQ	EQ	N	B	
NBLTH0461FCZZ	30- 21	BF	GN	N	A	
NBLTH0462FCZZ	38- 2	AQ	EQ	N	B	
NBLTH0463FCZZ	29- 8	AD	DJ	N	B	
NBLTH0479FCZZ	12- 10	AT	EZ	N	B	
NBLTH0494FCZZ	23- 4	AD	DJ	N	B	
NBRGC0017QSZZ	56- 6	AC	DJ		C	
NBRGC0020QSZZ	23- 14	AH	DX		C	
NBRGC0136FCZ1	39- 7	AC	DJ		C	
NBRGC0249FCZ1	35- 1	AD	DJ		C	
NBRGC0319FCZ1	40- 7	AC	DJ		C	
〃	41- 20	AC	DJ		C	
NBRGC0504FCZZ	15- 4	AC	DJ		C	
〃	18- 4	AC	DJ		C	
〃	39- 23	AC	DJ		C	
NBRGC0632FCZ1	40- 47	AE	DS		C	
NBRGC0754FCZZ	41- 30	AR	EQ	N	C	
NBRGC0757FCZZ	23- 5	AC	DJ	N	C	
NBRGC0798FCZZ	27- 34	AE	DS	N	C	
NBRGC0801FCZZ	27- 31	AE	DJ	N	C	
NBRGM0096FCZ1	10- 2	AC	DJ		C	
〃	11- 15	AC	DJ		C	
〃	12- 5	AC	DJ		C	
〃	15- 10	AC	DJ		C	
〃	16- 25	AC	DJ		C	
〃	34- 12	AC	DJ		C	
〃	36- 19	AC	DJ		C	
〃	45- 23	AC	DJ		C	
〃	52- 9	AC	DJ		C	
〃	56- 21	AC	DJ		C	
〃	58- 12	AC	DJ		C	
〃	58- 33	AC	DJ		C	
NBRGM0501FCZZ	40- 4	AB	DJ		C	
〃	41- 18	AB	DJ		C	
〃	54- 1	AB	DJ		C	
〃	55- 17	AB	DJ		C	
〃	55- 31	AB	DJ		C	
〃	56- 29	AB	DJ		C	
〃	57- 6	AB	DJ		C	
NBRGP0041GCZZ	55- 13	AD	DJ		C	
NBRGP0668FCZZ	53- 23	AE	DJ		C	
NBRGP0674FCZZ	26- 15	AE	DJ		C	
〃	30- 8	AE	DJ		C	
〃	37- 12	AE	DJ		C	
〃	38- 8	AE	DJ		C	
NBRGP0740FCZZ	37- 10	AQ	EQ	N	C	
NBRGP0741FCZZ	17- 6	AC	DJ	N	C	
NBRGP0742FCZZ	40- 12	AC	DJ	N	C	
NBRGP0744FCZZ	26- 33	AB	DJ	N	C	
〃	27- 15	AB	DJ	N	C	
〃	28- 19	AB	DJ	N	C	
NBRGP0745FCZZ	26- 31	AC	DJ	N	C	
NBRGP0746FCZZ	24- 34	AQ	EQ	N	C	
〃	25- 11	AQ	EQ	N	C	
NBRGP0748FCZZ	24- 25	AQ	EQ	N	C	
NBRGP0750FCZZ	26- 14	AC	DJ	N	C	
NBRGP0753FCZZ	21- 6	AB	DJ	N	C	
NBRGP0755FCZZ	26- 44	AC	DJ	N	C	
NBRGP0758FCZZ	30- 14	AQ	EQ	N	C	
NBRGP0759FCZZ	30- 17	AB	DJ	N	C	
NBRGP0760FCZZ	30- 5	AQ	EQ	N	C	
NBRGY0466FCZZ	40- 40	AK	EB		C	
〃	7- 23	AK	EB		C	
NBRGY0761FCZZ	32- 31	AQ	EQ	N	A	
NBRGY0762FCZZ	33- 14	AN	EQ	N	A	
NBRGY0769FCZZ	23- 47	AQ	EQ	N	C	
NBRGY0772FCZZ	40- 17	AP	EQ	N	C	
NBRGY0773FCZZ	40- 19	AP	EQ	N	C	
NCPL-0049FCZZ	52- 24	AH	DX		B	
NCPL-0052FCZZ	39- 40	AH	DX		C	
NCPL-0062FCZZ	18- 2	AD	DJ		C	
NCPL-0067FCZZ	15- 33	AD	DJ		C	
NCPL-0074FCZ1	40- 37	AD	DJ	N	C	
NCPL-0076FCZZ	45- 18	AC	DJ	N	C	

PARTS CODE	NO.	PRICE R. Ex.	PRICE R. Ja.	NEW	P/R	
NCPL-0077FCZZ	41- 5	AR	EQ	N	C	
NCPL-0078FCZZ	41- 7	AR	EQ	N	C	
NCPL-0079FCZZ	24- 24	AC	DJ	N	C	
NCPL-0080FCZZ	40- 9	AC	DJ	N	C	
NCPL-0081FCZZ	15- 29	AH	DX	N	A	
〃	16- 27	AH	DX	N	A	
NFANS0079FCPZ	47- 38	BC	GD	N	B	
NFLY-0011FCZZ	41- 26	AB	DJ	N	C	
NGERH0851FCZZ	40- 54	AD	DJ		C	
NGERH0863FCBZ	52- 10	AD	DJ		C	
NGERH1405FCZ1	39- 22	AG	DS		C	
NGERH1471FCZZ	46- 29	AF	DS		C	
NGERH1474FCZZ	18- 10	AC	DD		C	
NGERH1509FCZZ	38- 36	AE	DJ		C	
NGERH1510FCZZ	15- 9	AD	DJ		C	
NGERH1531FCZZ	37- 24	AD	DJ		C	
NGERH1608FCZZ	32- 30	AM	EG	N	A	
NGERH1609FCZZ	17- 7	AC	DJ	N	C	
〃	9- 17	AC	DJ	N	C	
NGERH1610FCZZ	40- 35	AS	EQ	N	C	
NGERH1617FCZZ	34- 21	AC	DJ	N	C	
〃	39- 10	AC	DJ	N	C	
〃	46- 36	AC	DJ	N	C	
〃	46- 52	AC	DJ	N	C	
NGERH1618FCZZ	36- 17	AF	DS	N	C	
NGERH1619FCZZ	58- 15	AC	DJ	N	C	
NGERH1620FCZZ	55- 15	AC	DJ		C	
NGERH1621FCZZ	58- 30	AC	DJ		C	
NGERH1622FCZZ	18- 5	AE	DJ	N	C	
NGERH1625FCZZ	40- 34	AR	EQ	N	C	
NGERH1626FCZZ	39- 27	AD	DJ	N	C	
NGERH1629FCZZ	34- 19	AC	DJ	N	C	
〃	38- 4	AC	DJ	N	C	
〃	39- 44	AC	DJ	N	C	
〃	46- 50	AC	DJ	N	C	
NGERH1630FCZZ	40- 28	AS	EQ	N	C	
NGERH1631FCZZ	40- 30	AR	EQ	N	C	
NGERH1632FCZZ	26- 12	AC	DJ	N	C	
NGERH1633FCZZ	45- 28	AC	DJ	N	C	
NGERH1634FCZZ	15- 8	AR	EQ	N	C	
〃	31- 5	AR	EQ	N	C	
〃	36- 14	AR	EQ	N	C	
NGERH1638FCZZ	11- 11	AD	DJ	N	C	
NGERH1640FCZZ	15- 1	AC	DJ	N	C	
〃	18- 7	AC	DJ	N	C	
〃	39- 4	AC	DJ	N	C	
NGERH1642FCZZ	40- 51	AE	DJ	N	C	
NGERH1643FCZ1	39- 28	AD	DJ	N	C	
NGERH1644FCZZ	39- 26	AC	DJ	N	C	
NGERH1645FCZZ	41- 3	AC	DJ	N	C	
NGERH1646FCZZ	55- 12	AC	DJ	N	C	
〃	56- 16	AC	DJ	N	C	
NGERH1647FCZZ	7- 17	AE	DJ	N	C	
NGERH1651FCZZ	40- 18	AC	DJ	N	C	
NGERH1652FCZZ	41- 23	AC	DJ	N	C	
NGERH1653FCZZ	23- 45	AC	DJ	N	C	
NGERH1654FCZZ	45- 19	AD	DJ	N	C	
NGERH1655FCZZ	38- 29	AD	DJ	N	C	
NGERH1656FCZZ	38- 18	AD	DJ	N	C	
NGERH1657FCZZ	37- 28	AE	DJ	N	C	
NGERH1659FCZZ	38- 40	AC	DJ	N	C	
NGERH1665FCZZ	40- 24	AC	DJ	N	C	
NGERH1667FCZZ	41- 21	AC	DJ	N	C	
NGERH1668FCZZ	27- 13	AR	EQ	N	A	
NGERH1669FCZZ	25- 2	AC	DJ	N	C	
NGERH1670FCZZ	25- 1	AC	DJ	N	C	
NGERH1679FCZZ	34- 16	AD	DJ	N	C	
〃	39- 1	AD	DJ	N	C	
NGERH1680FCZZ	55- 6	AC	DJ	N	C	
NGERH1681FCZZ	54- 7	AC	DJ	N	C	
NGERH1682FCZZ	54- 9	AT	EZ		C	
NGERH1683FCZZ	38- 17	AC	DJ	N	C	
NGERH1686FCZZ	29- 6	AR	EQ	N	A	
NGERH1693FCZZ	38- 32	AH	DX	N	C	
NGERP0168QSZZ	51- 15	AD	DJ		C	
NGERP1635FCZZ	14- 9	AD	DJ	N	C	
NGERR0169QSZZ	51- 18	AE	DS		C	
NGERR1675FCZZ	14- 8	AE	DJ	N	C	
NPLYZ0005QSZZ	7- 32	AG	DX		C	
NPLYZ0006QSZZ	7- 30	AD	DJ		C	
NPLYZ0029QSZZ	56- 41	AD	DJ		C	

PARTS CODE	NO.	PRICE R. Ex.	PRICE R. Ja.	NEW	P/R	
NPLYZ0031QSZZ	7- 10	AL	EB		C	
NPLYZ0033QSZZ	58- 8	AD	DJ		C	
NPLYZ0365FCZZ	11- 36	AC	DJ		C	
NPLYZ0401FCZZ	7- 7	BB	GD		C	
NPLYZ0434FCZZ	56- 15	AC	DJ	N	C	
NPLYZ0435FCZZ	58- 1	AC	DJ		C	
NPLYZ0436FCZZ	40- 32	AC	DJ	N	C	
NPLYZ0437FCZZ	52- 25	AT	EZ		C	
NPLYZ0438FCZZ	16- 31	AC	DJ	N	C	
NPLYZ0439FCZZ	16- 28	AC	DJ	N	C	
NPLYZ0440FCZZ	46- 35	AC	DJ	N	C	
NPLYZ0441FCZZ	11- 12	AC	DJ	N	C	
〃	12- 2	AC	DJ	N	C	
〃	36- 15	AC	DJ	N	C	
〃	38- 3	AC	DJ	N	C	
NPLYZ0443FCZZ	39- 13	AD	DJ	N	C	
NPLYZ0444FCZZ	39- 34	AC	DJ	N	C	
NPLYZ0445FCZZ	40- 43	AC	DJ	N	C	
NPLYZ0446FCZZ	58- 17	AC	DJ	N	C	
NPLYZ0449FCZ1	23- 11	AP	EQ	N	C	
NPLYZ0450FCZ1	23- 12	AC	DJ	N	C	
NPLYZ0451FCZZ	56- 7	AC	DJ		C	
NPLYZ0452FCZZ	52- 19	AC	DJ	N	C	
NPLYZ0453FCZZ	54- 17	AC	DJ	N	C	
NPLYZ0454FCZZ	54- 11	AC	DJ		C	
NPLYZ0455FCZZ	40- 42	AR	EQ	N	C	
NPLYZ0456FCZZ	56- 18	AT	EZ		C	
NPLYZ0457FCZZ	12- 17	AC	DJ	N	C	
NPLYZ0459FCZZ	29- 9	AR	EQ	N	C	
NPLYZ0489FCZZ	11- 12	AR	EQ	N	C	
〃	12- 21	AR	EQ	N	C	
NPLYZ0490FCZZ	23- 1	AB	DJ	N	C	
NRŌLi1533FCZZ	33- 15	BF	GN	N	A	
NRŌLi1534FCZ1	32- 32	BG	GT	N	A	
NRŌLM1536FCZ1	23- 22	BB	GD	N	C	
NRŌLM1553FCZZ	27- 9	BR	LP	N	A	
〃	28- 27	BR	LP	N	A	
NRŌLM1554FCZ1	27- 25	AQ	EQ	N	C	
NRŌLP0896FCZZ	15- 26	AC	DD		C	
〃	17- 9	AC	DD		C	
NRŌLP1351FCZZ	11- 29	AG	DX		C	
NRŌLP1514FCZZ	23- 32	AN	EQ	N	C	
NRŌLP1515FCZ1	23- 31	AN	EQ	N	C	
NRŌLP1516FCZZ	10- 12	AA	DJ	N	C	
〃	13- 12	AA	DJ	N	C	
〃	35- 9	AA	DJ	N	C	
〃	36- 2	AA	DJ	N	C	
NRŌLP1517FCZZ	50- 34	AA	DJ	N	C	
〃	51- 8	AA	DJ	N	C	
〃	52- 37	AA	DJ	N	C	
〃	53- 7	AA	DJ	N	C	
〃	57- 3	AA	DJ	N	C	
NRŌLP1527FCZZ	17- 8	AY	FQ	N	A	
NRŌLR1466FCZ1	10- 4	AN	DX		A	
〃	11- 41	AN	DX		A	
〃	15- 37	AN	DX		A	
〃	16- 29	AN	DX		A	
NRŌLR1467FCZ1	11- 40	AN	DX		A	
〃	16- 33	AN	DX		A	
NRŌLR1519FCZZ	15- 23	AU	FG	N	A	
NRŌLR1520FCZ1	36- 30	AV	FG	N	A	
NRŌLR1521FCZZ	36- 31	AU	EZ	N	A	
NRŌLR1522FCZZ	36- 1	AU	EZ	N	C	
NRŌLR1524FCZZ	11- 8	AT	EZ	N	C	
NRŌLR1525FCZZ	12- 8	AT	EZ	N	A	
NRŌLR1526FCZZ	18- 12	AZ	FQ	N	A	
NRŌLR1529FCZZ	18- 14	AU	FG	N	A	
NRŌLR1535FCZZ	55- 1	AT	EZ	N	B	
NRŌLR1539FCZZ	37- 16	AV	FG		A	
NRŌLR1540FCZZ	56- 1	AV	FG	N	B	
NRŌLR1541FCZZ	52- 23	AG	DX	N	B	
NRŌLR1542FCZZ	52- 21	AH	DX	N	B	
NRŌLR1543FCZZ	54- 21	AU	EZ	N	B	
NRŌLR1544FCZZ	56- 37	AY	FQ	N	B	
NRŌLR1545FCZ1	54- 19	BD	GJ	N	B	
NRŌLR1551FCZZ	28- 26	BQ	LP	N	A	
NRŌLR1552FCZZ	54- 20	AX	FG	N	B	
NRŌLR1555FCZZ	53- 10	AG	DX	N	B	
NRŌLR1557FCZZ	30- 15	AR	EQ	N	A	
NRŌLR1558FCZZ	30- 16	AR	EQ	N	A	
NRŌLR1559FCZZ	30- 6	AV	FG	N	A	

PARTS CODE	NO.	PRICE R. Ex.	PRICE R. Ja.	NEW	P/R	
NRŌLR1590FCZZ	57- 5	AT	EZ	N	B	
NRŌLS1634FCZZ	26- 56	AX	FG	N	A	
NSFTZ0009QSPZ	50- 33	AL	EB		C	
〃	52- 36	AL	EB		C	
〃	53- 6	AL	EB		C	
〃	57- 4	AL	EB		C	
NSFTZ1805FCPZ	4- 1	AM	EG	N	C	
NSFTZ2694FCPZ	7- 11	AY	FQ	N	C	
NSFTZ2890FCZ1	24- 9	AE	DS	N	C	
NSFTZ2905FCZZ	26- 10	BQ	LP	N	C	
NSFTZ2906FCZZ	27- 24	BQ	LP	N	C	
NSFTZ2907FCZ1	28- 9	AP	EQ	N	C	
NSFTZ2908FCZ1	28- 12	AS	EZ	N	C	
NSFTZ2910FCZZ	21- 12	BR	LP	N	C	
NSFTZ2911FCZZ	21- 23	AU	EZ	N	C	
NSFTZ2912FCZZ	53- 14	AX	FG	N	C	
NSFTZ2913FCZZ	52- 5	AX	FQ	N	C	
NSFTZ2914FCZZ	50- 41	AP	EQ	N	C	
〃	51- 9	AP	EQ	N	C	
NSFTZ2915FCZZ	52- 18	AM	EG	N	C	
NSFTZ2916FCZZ	58- 10	AS	EQ	N	C	
NSFTZ2917FCZZ	58- 32	AM	EG	N	C	
NSFTZ2919FCZZ	45- 17	AQ	EQ	N	C	
NSFTZ2922FCZZ	40- 25	AZ	FX	N	C	
NSFTZ2923FCZZ	40- 33	AQ	EQ	N	C	
NSFTZ2924FCZZ	40- 5	AT	EZ	N	C	
NSFTZ2926FCZZ	40- 11	AS	EQ	N	C	
NSFTZ2927FCZZ	11- 34	BT	MW	N	C	
NSFTZ2928FCZZ	11- 35	AR	EQ	N	C	
NSFTZ2930FCZZ	13- 7	BQ	LP	N	C	
NSFTZ2931FCZZ	18- 6	BQ	LP	N	C	
NSFTZ2932FCZZ	17- 11	BQ	LP	N	C	
NSFTZ2933FCZZ	15- 28	BQ	LP	N	C	
NSFTZ2934FCZZ	15- 35	AR	EQ	N	C	
NSFTZ2935FCZ1	15- 30	AP	EQ	N	C	
NSFTZ2936FCZZ	16- 30	AN	EG	N	C	
NSFTZ2937FCZZ	16- 20	AP	EQ	N	C	
NSFTZ2939FCZZ	40- 56	AR	EQ	N	C	
NSFTZ2940FCZZ	39- 9	AP	EQ	N	C	
NSFTZ2941FCZZ	39- 12	AF	DS	N	C	
NSFTZ2942FCZZ	46- 47	BQ	LP	N	C	
NSFTZ2943FCZZ	39- 36	AR	EQ	N	C	
NSFTZ2944FCZZ	39- 21	AF	DS	N	C	
NSFTZ2945FCZZ	39- 29	AQ	EQ	N	C	
NSFTZ2946FCZZ	39- 33	AS	EQ	N	C	
NSFTZ2947FCZZ	39- 25	AR	EQ	N	C	
NSFTZ2948FCZZ	34- 20	AF	DS	N	C	
〃	46- 49	AF	DS	N	C	
NSFTZ2949FCZZ	10- 13	AG	DX	N	C	
〃	13- 14	AG	DX	N	C	
〃	36- 3	AG	DX	N	C	
NSFTZ2950FCZZ	34- 14	AN	EQ	N	C	
NSFTZ2951FCZZ	35- 28	AN	EG	N	C	
NSFTZ2952FCZZ	46- 27	AL	EB	N	C	
NSFTZ2953FCZZ	34- 40	AS	EQ	N	C	
NSFTZ2954FCZZ	35- 10	AG	DS	N	C	
〃	36- 8	AG	DS	N	C	
NSFTZ2960FCZZ	46- 37	AL	EB	N	C	
NSFTZ2962FCZZ	38- 16	BQ	LP	N	C	
NSFTZ2963FCZZ	37- 13	AH	DX	N	C	
NSFTZ2964FCZZ	38- 19	AM	EG	N	C	
NSFTZ2965FCZZ	38- 5	BQ	LP	N	C	
NSFTZ3018FCZZ	22- 5	AL	EB	N	C	
NSRW-0040FCZZ	24- 26	AH	DX	N	C	
〃	25- 18	AH	DX	N	C	
【P】						
PBARP0045FCZZ	2- 33	AE	DJ	N	D	
PBŌX-0147FCZZ	23- 25	AN	EG	N	D	
PBŌX-0151FCZZ	6- 5	AK	EB	N	D	
PBŌX-0152FCZZ	47- 39	AK	EB	N	D	
PBRSR0231FCZ2	37- 7	AX	FG	N	B	
PBRSS0192FCZZ	35- 32	AH	DX		B	
PBRSS0230FCZZ	57- 8	AE	DS	N	B	
PBRSS0237FCZ1	38- 46	AG	DX	N	B	
PBRSS0240FCZZ	33- 42	AG	DX	N	B	
PCASZ0312FCZZ	46- 15	AG	DX	N	C	
PCASZ0313FCZZ	48- 32	AV	FG	N	C	
PCASZ0314FCZZ	48- 14	AY	FQ	N	C	
PCLC-0017QSPZ	58- 7	AT	EQ	N	B	
PCLC-0316FCP1	10- 6	AP	EQ	N	B	
〃	15- 31	AP	EQ	N	B	

PARTS CODE	NO.	PRICE R. Ex.	PRICE R. Ja.	NEW	P/R	
PCLC-0337FCZZ	54- 5	BA	FX	N	B	
PCLC-0342FCZZ	34- 15	BA	FX	N	B	
〃	39- 31	BA	FX	N	B	
〃	41- 17	BA	FX	N	B	
PCLR-0461FCZZ	53- 4	AC	DJ		C	
PCLR-0477FCZZ	38- 38	AE	DJ		C	
PCLR-0478FCZZ	36- 13	AC	DJ		C	
PCLR-0479FCZZ	37- 6	AC	DJ		C	
PCLR-0498FCZZ	38- 44	AE	DS	N	C	
PCLR-0501FCZZ	18- 19	AB	DJ	N	C	
〃	36- 33	AB	DJ	N	C	
〃	38- 42	AB	DJ	N	C	
PCLR-0509FCZZ	46- 28	AC	DJ	N	C	
PCLR-0511FCZZ	27- 18	AC	DJ	N	C	
PCLR-0512FCZ1	27- 8	AQ	EQ	N	A	
〃	28- 25	AQ	EQ	N	A	
PCLR-0513FCZZ	27- 23	AB	DJ	N	C	
PCLR-0514FCZZ	27- 27	AB	DJ	N	C	
PCLR-0515FCZZ	27- 26	AC	DJ	N	C	
PCLR-0518FCZ1	35- 27	AD	DJ	N	C	
〃	37- 15	AD	DJ	N	C	
PCLR-0519FCZZ	48- 12	AE	DS	N	C	
PCLR-0520FCZZ	56- 9	AB	DJ	N	C	
〃	58- 24	AB	DJ	N	C	
PCLR-0522FCZZ	29- 5	AC	DJ	N	C	
PCŌVP0911FCZ3	1- 13	AD	DJ	N	D	
PCŌVP0941FCZ3	1- 11	AD	DJ	N	D	
PCŌVP1798FCZZ	31- 4	AX	FG	N	D	
PCŌVP1799FCZ1	32- 17	BG	GT	N	D	
PCŌVP1801FCZ1	33- 35	AW	FG	N	D	
PCŌVP1821FCZZ	14- 14	AL	EB	N	D	
PCŌVP1823FCZZ	34- 1	AN	EQ	N	C	
PCŌVP1824FCZZ	50- 20	AE	DS	N	C	
PCŌVP1825FCZZ	25- 15	AD	DJ	N	D	
PCŌVP1832FCZ1	2- 29	AR	EQ	N	D	
PCŌVP1832FCZZ	2- 29	AR	EQ	N	D	
PCŌVP1833FCZZ	15- 17	AD	DJ	N	D	
PCŌVP1834FCZZ	16- 10	AH	DX	N	D	
PCŌVP1835FCZZ	14- 13	AC	DJ	N	C	
PCŌVP1838FCZZ	46- 58	AE	DJ	N	C	
PCŌVP1840FCZZ	24- 40	AF	DS	N	D	
PCŌVP1844FCZZ	22- 12	AK	EB	N	D	
PCŌVP1845FCZZ	23- 36	AD	DJ	N	D	
PCŌVP1846FCZZ	22- 24	AG	DS	N	D	
PCŌVP1847FCZZ	22- 19	AC	DJ	N	D	
PCŌVP1849FCZZ	24- 23	AC	DJ	N	D	
PCŌVP1850FCZZ	53- 1	AD	DJ	N	C	
PCŌVP1851FCZZ	52- 1	AT	EZ	N	C	
PCŌVP1852FCZZ	26- 23	AT	EZ	N	D	
PCŌVP1853FCZZ	26- 45	AQ	EQ	N	C	
PCŌVP1855FCZZ	50- 26	AF	DS	N	C	
PCŌVP1856FCZ1	50- 31	AE	DS	N	C	
PCŌVP1857FCZZ	6- 14	AL	EB	N	D	
PCŌVP1863FCZZ	46- 54	AD	DJ	N	C	
PCŌVP1864FCZZ	6- 7	AG	DX	N	D	
PCŌVP1866FCZZ	23- 20	AC	DJ	N	D	
PCŌVP1868FCZZ	2- 28	AX	FG	N	D	
PCŌVP1869FCZ1	2- 30	AS	EZ	N	D	
PCŌVP1870FCZZ	2- 42	AE	DJ	N	D	
PCŌVP1872FCZZ	48- 38	AK	DX	N	C	
PCŌVP1878FCZZ	2- 21	AE	DS	N	D	
PCŌVP1883FCZZ	45- 3	AC	DJ	N	C	
〃	47- 16	AC	DJ	N	C	
PCŌVP1885FCZZ	47- 49	AK	DX	N	C	
PCŌVP1889FCZ1	19- 11	AC	DJ	N	C	
PCŌVP1892FCZZ	36- 35	AK	DX	N	D	
PCŌVP1893FCZZ	46- 45	AE	DJ	N	C	
PCŌVP1930FCZZ	50- 12	AE	DS	N	C	
PCŌVP1933FCZZ	47- 62	AE	DS	N	C	
PCŌVP1941FCZZ	34- 50	AD	DJ	N	C	
PCŌVP1946FCZZ	43- 11	AE	DS	N	B	
PCŌVP2004FCZ1	33- 40	AP	EQ	N	C	
PCŌVP2005FCZZ	19- 16	AC	DJ	N	C	
PCŌVP2017FCZZ	50- 51	AL	EB	N	C	
PCŌVP2018FCZZ	55- 41	AC	DJ	N	C	
PCŌVP2019FCZZ	55- 42	AC	DJ	N	C	
PCŌVP2020FCZZ	32- 38	AC	DJ	N	C	
PCŌVP2022FCZZ	2- 54	AP	EQ	N	D	
〃	59- 29	AP	EQ	N	D	
PCUSF0334FCZZ	8- 16	AP	EQ		C	
PCUSG0378FCZZ	43- 7	AF	DS		C	

PARTS CODE	NO.	PRICE R. Ex.	PRICE R. Ja.	NEW	P/R	
PCUSU0203FCZZ	8- 8	AE	DS		C	
PDUC-0185FCZZ	37- 17	AQ	EQ	N	C	
PDUC-0186FCZZ	47- 32	AS	EQ	N	C	
PDUC-0187FCZZ	47- 31	AQ	EQ	N	C	
PDUC-0188FCZZ	47- 34	AM	EG	N	C	
PFiLZ0308FCZZ	47- 40	AZ	FQ	N	A	
PFTA-0135FCPZ	2- 11	AD	DJ	N	D	
PFTAP0149FCZZ	46- 11	AG	DS	N	C	
PFTAP0150FCZZ	2- 26	AC	DJ	N	D	
PGiDH2141FCZZ	35- 29	AK	DX	N	C	
PGiDH2143FCZ1	33- 21	AH	DX	N	C	
PGiDH2144FCZZ	29- 20	AL	EB	N	C	
PGiDH2153FCZZ	57- 9	AG	DX	N	C	
PGiDH2161FCZZ	48- 2	AG	DX	N	C	
PGiDM1890FCZZ	7- 3	AC	DJ		C	
PGiDM2106FCZ1	33- 32	BD	GN	N	C	
PGiDM2107FCZ1	32- 10	BD	GN	N	D	
PGiDM2108FCZZ	38- 15	BT	NE	N	C	
PGiDM2109FCZZ	37- 8	BB	GD	N	C	
PGiDM2111FCZZ	6- 24	AC	DJ	N	C	
PGiDM2113FCZZ	12- 18	AL	EB	N	C	
PGiDM2114FCZZ	15- 21	AQ	EQ	N	C	
PGiDM2115FCZZ	16- 21	AP	EQ	N	C	
PGiDM2117FCZZ	16- 3	AQ	EQ	N	C	
PGiDM2118FCZZ	14- 6	AD	DJ	N	C	
PGiDM2119FCZZ	14- 4	AE	DJ	N	C	
PGiDM2120FCZ1	35- 7	AS	EZ	N	C	
PGiDM2121FCZZ	36- 32	AQ	EQ	N	C	
PGiDM2122FCZZ	11- 24	AT	EZ	N	C	
PGiDM2123FCZZ	10- 3	AN	EQ	N	C	
PGiDM2124FCZZ	12- 13	AL	EB	N	C	
PGiDM2125FCZZ	12- 14	AL	EB	N	C	
PGiDM2126FCZZ	11- 25	AH	DX	N	C	
PGiDM2127FCZZ	12- 7	AP	EQ	N	C	
PGiDM2128FCZZ	13- 1	AW	FG	N	C	
PGiDM2129FCZZ	18- 20	AM	EG	N	C	
PGiDM2130FCZZ	55- 3	AV	FG	N	D	
PGiDM2131FCZ1	22- 21	AM	EG	N	C	
PGiDM2131FCZ2	22- 21	AM	EG	N	C	
PGiDM2131FCZ3	22- 21	AM	EG	N	C	
PGiDM2131FCZZ	22- 21	AM	EG	N	C	
PGiDM2132FCZZ	22- 17	AC	DJ	N	C	
PGiDM2133FCZZ	37- 22	AQ	EQ	N	C	
PGiDM2134FCZZ	55- 24	AN	EG	N	D	
PGiDM2135FCZZ	53- 21	AN	EG	N	C	
PGiDM2136FCZZ	53- 5	AL	EB	N	D	
PGiDM2137FCZZ	52- 4	AV	FG	N	C	
PGiDM2138FCZZ	52- 14	AD	DJ	N	C	
PGiDM2139FCZZ	52- 22	AC	DJ	N	C	
PGiDM2148FCZZ	35- 4	AQ	EQ	N	C	
PGiDM2149FCZZ	35- 36	AR	EQ	N	C	
PGiDM2150FCZZ	55- 18	AE	DJ	N	C	
PGiDM2152FCZZ	55- 22	AL	EB	N	D	
PGiDM2154FCZZ	21- 26	AG	DS	N	C	
PGiDM2155FCZZ	11- 24	AT	EZ	N	C	
PGiDM2156FCZZ	10- 3	AN	EQ	N	C	
PGiDM2157FCZZ	26- 7	AC	DJ	N	C	
PGiDW2158FCZZ	14- 28	AF	DS	N	C	
PGLSP0109FCZZ	1- 5	BD	GN	N	A	
PGUMS0283FCZ1	1- 6	AA	DJ		C	
〃	7- 28	AA	DJ		C	
PHAG-0005FCZZ	50- 28	AC	DJ	N	C	
PHOG-2066SC15	6- 29	AA	DD		C	
PLNS-0083FCZZ	5- 5	AC	DJ	N	B	
PLNS-0084FCZZ	5- 10	AC	DJ	N	B	
PMAGT0015FCPZ	2- 43	AF	DS	N	C	
〃	26- 28	AF	DS	N	C	
PMiR-0164FCZZ	8- 12	AP	EQ		B	
PMLT-1409FCZ1	25- 5	AA	DJ	N	C	
PMLT-1410FCZZ	25- 17	AC	DJ	N	C	
PMLT-1417FCZZ	52- 30	AC	DJ	N	C	
PMLT-1418FCZZ	50- 39	AA	DJ	N	C	
〃	55- 40	AA	DJ	N	C	
PMLT-1419FCZZ	24- 17	AD	DJ	N	C	
PMLT-1420FCZZ	24- 15	AA	DJ	N	C	
PMLT-1421FCZZ	24- 21	AB	DJ	N	C	
PMLT-1422FCZZ	24- 22	AB	DJ	N	C	
PMLT-1426FCZZ	47- 14	AC	DJ	N	C	
PMLT-1428FCZ1	19- 10	AD	DJ	N	C	
PMLT-1433FCZZ	24- 6	AD	DJ	N	C	
PMLT-1436FCZ1	19- 3	AC	DJ	N	C	

PARTS CODE	NO.	PRICE R. Ex.	PRICE R. Ja.	NEW	P/R	
PMLT-1437FCZZ	19- 1	AB	DJ	N	C	
PMLT-1439FCZZ	24- 37	AC	DJ	N	C	
〃	25- 21	AC	DJ	N	C	
PMLT-1447FCZZ	15- 47	AA	DJ	N	C	
PPiPP0213FCZZ	24- 33	AC	DJ	N	C	
PPiPP0214FCZZ	25- 9	AD	DJ	N	C	
PPiPP0217FCZZ	19- 2	AD	DJ	N	C	
PREFL0173FCZZ	8- 6	AN	EQ	N	C	
PRNGP0077FCZZ	13- 16	AA	DD		C	
PRNGP0081FCZZ	24- 36	AA	DJ		C	
〃	25- 12	AA	DJ		C	
PRNGP0090FCZZ	54- 4	AA	DJ		C	
〃	55- 14	AA	DJ		C	
〃	56- 43	AA	DJ		C	
〃	58- 20	AA	DJ		C	
PRNGP0109FCZZ	40- 15	AA	DJ		C	
〃	41- 9	AA	DJ		C	
PRNGP0110FCZZ	41- 6	AA	DJ		C	
PRNGP0115FCZZ	15- 42	AB	DJ		C	
PSEL-0911FCZ1	25- 8	AC	DJ	N	C	
PSEL-0912FCZ2	24- 13	AD	DJ	N	A	
PSEL-0913FCZ2	24- 11	AD	DJ	N	A	
PSEL-0914FCZZ	23- 26	AD	DJ	N	A	
PSEL-0915FCZ1	23- 15	AD	DJ	N	A	
PSEL-0916FCZZ	23- 27	AD	DJ	N	C	
PSEL-0917FCZZ	23- 16	AB	DJ	N	C	
PSEL-0918FCZ1	22- 15	AD	DJ	N	C	
PSEL-0919FCZ1	22- 6	AD	DJ	N	C	
PSEL-0922FCZZ	23- 46	AD	DJ	N	C	
PSEL-0925FCZZ	23- 42	AD	DJ	N	A	
PSEL-0930FCZZ	22- 25	AC	DJ	N	C	
PSEL-0932FCZ1	25- 6	AC	DJ	N	C	
PSEL-0934FCZZ	19- 12	AC	DJ	N	D	
PSEL-0936FCZZ	47- 54	AC	DJ	N	C	
PSEL-0950FCZZ	19- 17	AA	DJ	N	C	
PSEL-0956FCZZ	22- 32	AE	DJ	N	A	
PSEL-0957FCZZ	22- 10	AB	DJ	N	C	
PSHEP5301FCZZ	7- 39	AB	DJ		C	
PSHEP5422FCZZ	56- 36	AH	DX	N	C	
PSHEP5441FCZZ	58- 2	AB	DJ	N	C	
PSHEP5442FCZZ	52- 29	AC	DJ	N	C	
PSHEP5458FCZZ	47- 53	AD	DJ	N	C	
PSHEP5461FCZZ	55- 43	AA	DJ	N	C	
PSHEP5466FCZZ	52- 43	AA	DJ	N	C	
PSHEP5481FCZZ	32- 39	AU	FG	N	C	
PSHEP5486FCZZ	40- 61	AC	DJ	N	C	
PSHEP5497FCPZ	47- 63	AC	DJ	N	C	
PSHEP5507FCZZ	8- 17	AC	DJ	N	C	
PSHEZ3130FCZZ	53- 8	AB	DD		C	
PSHEZ4836FCZZ	7- 31	AB	DJ		C	
PSHEZ4906FCZZ	5- 21	AC	DJ		C	
PSHEZ4960FCZZ	15- 16	AQ	EQ		C	
PSHEZ5345FCZZ	3- 10	AX	FG	N	C	
PSHEZ5359FCZ1	24- 10	AF	DJ	N	A	
PSHEZ5360FCZZ	24- 3	AF	DS	N	C	
PSHEZ5361FCZZ	1- 26	AG	DX	N	C	
PSHEZ5362FCZZ	6- 33	AC	DJ		C	
PSHEZ5363FCZZ	6- 6	AB	DJ	N	C	
PSHEZ5364FCZZ	6- 34	AC	DJ		C	
PSHEZ5365FCZZ	6- 35	AC	DJ		C	
PSHEZ5366FCZZ	1- 9	AB	DJ	N	C	
PSHEZ5367FCZZ	1- 8	AC	DJ	N	C	
PSHEZ5368FCZZ	1- 7	AD	DJ	N	C	
PSHEZ5372FCZZ	50- 35	AE	DJ	N	C	
PSHEZ5374FCZZ	50- 6	AD	DJ	N	C	
PSHEZ5375FCZZ	55- 23	AD	DJ	N	C	
PSHEZ5377FCZZ	54- 13	AA	DJ	N	C	
〃	56- 20	AA	DJ	N	C	
PSHEZ5378FCZZ	22- 31	AD	DJ	N	A	
PSHEZ5381FCZZ	40- 16	AC	DJ	N	C	
PSHEZ5382FCZ1	22- 1	AE	DJ	N	C	
PSHEZ5383FCZ1	19- 7	AC	DJ	N	C	
PSHEZ5386FCZZ	18- 15	AD	DJ	N	C	
PSHEZ5387FCZZ	9- 25	AD	DJ	N	C	
PSHEZ5388FCZZ	9- 19	AC	DJ	N	C	
PSHEZ5391FCZZ	5- 2	AC	DJ	N	C	
PSHEZ5392FCZZ	5- 3	AB	DJ	N	C	
PSHEZ5394FCZZ	56- 22	AA	DJ	N	C	
PSHEZ5397FCZZ	9- 8	AD	DJ	N	C	
PSHEZ5399FCZZ	9- 4	AE	DS	N	C	
PSHEZ5400FCZ1	50- 48	AX	FG	N	D	

PARTS CODE	NO.	PRICE R. Ex.	PRICE R. Ja.	NEW	P/R	
PSHEZ5449FCZZ	57- 11	AC	DJ	N	C	
PSHEZ5455FCZ1	2- 47	AG	DJ	N	C	
PSHEZ5456FCZ1	2- 50	AG	DJ	N	C	
PSHEZ5468FCZZ	19- 15	AC	DJ	N	C	
PSHEZ5469FCZZ	25- 23	AN	EQ	N	C	
PSHEZ5470FCZZ	37- 34	AF	DS		C	
PSHT-0105FCZ1	22- 7	AB	DJ	N	C	
PSHT-0106FCZZ	24- 39	AC	DJ	N	C	
〃	25- 14	AC	DJ	N	C	
PSHT-0107FCZZ	21- 3	AF	DS	N	C	
PSHT-0109FCZ2	19- 8	AC	DJ	N	C	
PSLDM0186FCZZ	42- 7	AQ	EQ	N	C	
PSLDM0187FCZZ	42- 11	AM	EG	N	C	
PSLDP0183FCZZ	4- 6	AD	DJ		C	
PTME-0030QSZZ	56- 35	AC	DJ		C	
PTME-0284FCZZ	13- 6	AE	DS		C	
PTME-0305FCZZ	34- 37	AC	DJ	N	C	
PTPE-0026QSZZ	25- 24	AA	DJ		C	
PTPE-0282FCZZ	9- 12	AA	DJ	N	C	
PWiR-0191FCP1	7- 1	AN	EG	N	C	
PWiR-0192FCP1	7- 12	AN	EG	N	C	
【Q】						
QACCB7623QCZZ	44- 23	AQ	EQ		B	
QACCB9521QCZZ	44- 23	AW	FG		B	
QACCD7713QCPZ	44- 23	AT	EZ	N	B	
QACCJ6413QCPA	44- 23	AY	FQ	N	B	
QACCJ6912QCPZ	44- 23	AV	FG		B	
QACCLR624QCPZ	44- 23	BA	FX		B	
QACCVR621QCPZ	44- 23	AQ	FQ		B	
QCNW-0226FCZ1	42- 13	AD	DJ	N	C	
QCNW-0227FCZ1	8- 13	AE	DJ	N	C	
QCNW-0230FCZZ	5- 24	AF	DS	N	C	
QEARP0190FCZZ	18- 22	AC	DJ	N	C	
QEARP0191FCZZ	32- 22	AC	DJ	N	C	
QEARP0192FCZZ	24- 19	AC	DJ	N	C	
QEARP0193FCZ1	27- 30	AC	DJ	N	C	
QEARP0195FCZZ	12- 9	AC	DJ	N	C	
QEARP0196FCZZ	18- 13	AD	DJ	N	C	
QEARP0197FCZZ	28- 1	AC	DJ	N	C	
QEARP0201FCZZ	17- 13	AC	DJ	N	C	
〃	38- 30	AC	DJ	N	C	
〃	39- 20	AC	DJ	N	C	
QEARP0203FCZZ	37- 14	AD	DJ	N	C	
QEARP0204FCZZ	37- 2	AD	DJ	N	C	
QEARP0205FCZZ	37- 21	AC	DJ	N	C	
QEARP0206FCZZ	30- 9	AC	DJ	N	C	
QEARP0208FCZZ	29- 16	AD	DJ	N	C	
QEARP0218FCPZ	58- 4	AE	DS	N	C	
QSLP-0206FCZZ	32- 21	AD	DJ	N	B	
QSLP-0207FCZZ	32- 19	AC	DJ	N	B	
QSLP-0208FCZZ	46- 18	AD	DJ	N	B	
QSLP-0209FCZZ	23- 33	AC	DJ	N	B	
QSLP-0212FCZZ	46- 41	AC	DJ	N	B	
QSLP-0216FCZZ	46- 4	AC	DJ	N	B	
QSW-B0017QSZZ	45- 29	AF	DS		B	
QSW-C9294QCZZ	47- 13	AF	DS		B	
QSW-C9295QCZZ	45- 7	AL	EB		B	
QSW-M0502FCPZ	46- 42	AH	DX	N	B	
〃	48- 15	AH	DX	N	B	
〃	52- 2	AH	DX	N	B	
【R】						
RCORF0046FCZZ	59-102	AH	DX	N	C	
RDTCH0161FCZZ	14- 21	AX	FG		B	
RDTCT0165FCZZ	23- 23	AX	FG	N	B	
RDTCT0166FCZZ	23- 23	AX	FG	N	B	
RDTCT0167FCZZ	23- 23	AX	FG	N	B	
RDTCT0168FCZZ	23- 23	AX	FG	N	B	
RDTCT0169FCZ2	32- 18	AP	EQ	N	B	
RDTCT0170FCZ1	33- 20	AP	EQ	N	A	
RDTCT0180FCZZ	32- 37	AZ	FQ	N	B	
RHETP0133FCP1	48- 29	AV	FG	N	B	
RH-iX0017FCPZ	43- 20	BS	MW	N	B	
〃	43- 21	BS	MW	N	B	
RH-iX0018FCPZ	43- 19	CA	TR	N	B	
〃	43- 21	CA	TR	N	B	
RLMPD0703FCZZ	8- 1	BD	GN	N	B	
RLMPU0704FCPZ	32- 34	AY	FQ	N	B	
RLMPU0705FCPZ	32- 34	AY	FQ	N	B	
RLMPU0707FCPZ	32- 33	AY	FQ	N	B	
RLMPU0708FCPZ	32- 33	AY	FQ	N	B	
RLMPU0710FCPZ	33- 12	AY	FQ	N	B	

PARTS CODE	NO.	PRICE R. Ex.	PRICE R. Ja.	NEW	P/R	
RLMPU0711FCPZ	33- 12	AY	FQ	N	B	
RMOTD0930FCPZ	41- 11	BB	GD	N	B	
RMOTD0931FCPZ	45- 25	AZ	FQ	N	B	
RMOTP0916FCZZ	21- 19	BN	LE	N	B	
RMOTP0928FCPZ	39- 38	BH	HC	N	B	
RMOTP0929FCPZ	41- 12	BH	HC	N	B	
RMOTS0890FCNA	37- 29	BA	EZ		B	
RMOTS0921FCPZ	41- 25	AT	EZ	N	B	
RPLU-0353FCPZ	15- 38	AQ	EQ	N	B	
RPLU-0365FCZZ	16- 11	AT	EZ	N	B	
RPLU-0366FCZZ	56- 25	AQ	EQ	N	B	
RPLU-0367FCZZ	20- 6	AN	EG	N	B	
RPLU-0368FCZZ	46- 6	AT	EZ	N	B	
RSPA00001QSZZ	47- 22	AH	DX		B	
RTHM-0021FCZZ	33- 17	AN	EG		B	
RTHM-0028FCZZ	32- 6	AL	EB	N	B	
【S】						
SPAKA0040YSZZ	59- 79	AH	DX	N	D	
SPAKA0041YSZZ	59- 80	AH	DX	N	D	
SPAKA0545YSZZ	59- 81	AE	DS	N	D	
SPAKA0616QSZZ	59- 6	AA	DJ	N	D	
SPAKA6075FCZZ	59- 12	AE	DJ	N	D	
SPAKG0544YS11	59- 99	AS	EQ	N	D	
SSAKA2440QCZZ	59-103	AB	DD		D	
SSAKA3001CCZZ	59- 31	AA	DD		D	
SSAKA5004CCZZ	59- 20	AA	DD		D	
SSAKH3013CCZZ	59-104	AA	DD		D	
SSAKZ0034FCZZ	59- 28	BQ	LP	N	D	
SSAKZ0037FCZZ	59- 32	AB	DJ	N	D	
【T】						
TCADS1693FCZZ	59-106	AA	DS		D	
TCADZ1178FCZZ	59- 11	AB	DJ		D	
TCADZ1275FCZZ	59- 22	AB	DJ		D	
TCADZ1757FCZZ	59-113	AH	DX	N	D	
TCADZ6027FCZZ	9- 7	AD	DJ	N	D	
TCADZ6029FCZZ	9- 7	AD	DJ	N	D	
TCAUA1069FCZZ	2- 59	AC	DJ	N	D	
TCAUH1035FCZZ	48- 42	AC	DJ		D	
TiNSE3109FCZZ	59-114	AG	DX	N	D	
TiNSE3123FCZZ	59-107	BB	GD	N	D	
TiNSE3136FCZZ	59-108	AQ	EQ	N	D	
TiNSE3149FCZZ	59-109	AQ	EQ	N	D	
TiNSE3162FCZZ	59-110	AM	EG	N	D	
TiNSJ3122FCZZ	59-107	BB	GD	N	D	
TiNSJ3135FCZZ	59-108	AQ	EQ	N	D	
TiNSJ3148FCZZ	59-109	AQ	EQ	N	D	
TiNSJ3161FCZZ	59-110	AM	EG	N	D	
TLABG5005FCZZ	2- 57	AC	DJ	N	D	
TLABH0289QSZZ	33- 37	AA	DJ		D	
TLABH0308QSZZ	33- 38	AF	DS		D	
TLABH4993FCZ1	24- 41	AB	DJ	N	D	
〃	26- 34	AB	DJ	N	D	
TLABH4994FCZZ	24- 41	AA	DJ	N	D	
〃	26- 35	AA	DJ	N	D	
TLABH4995FCZZ	24- 41	AA	DJ	N	D	
〃	26- 36	AA	DJ	N	D	
TLABH4996FCZZ	24- 41	AA	DJ	N	D	
〃	26- 37	AA	DJ	N	D	
TLABH4997FCZZ	22- 33	AA	DJ	N	D	
〃	24- 18	AA	DJ	N	D	
TLABH4998FCZZ	22- 33	AA	DJ	N	D	
〃	24- 18	AA	DJ	N	D	
TLABH4999FCZZ	22- 33	AA	DJ	N	D	
〃	24- 18	AA	DJ	N	D	
TLABH5000FCZZ	22- 33	AA	DJ	N	D	
〃	24- 18	AA	DJ	N	D	
TLABH5004FCZZ	2- 58	AB	DJ	N	D	
TLABH5006FCZZ	1- 23	AD	DJ	N	D	
TLABH5022FCZZ	14- 5	AF	DS	N	D	
TLABH5027FCZZ	26- 27	AA	DJ	N	D	
TLABH5028FCZZ	26- 26	AA	DJ	N	D	
TLABH5029FCZZ	26- 25	AA	DJ	N	D	
TLABH5030FCZZ	26- 24	AB	DJ	N	D	
TLABH5109FCZZ	14- 11	AD	DJ	N	D	
TLABH5110FCZZ	14- 5	AD	DJ	N	D	
TLABZ4335FCZZ	8- 5	AB	DJ		D	
TLABZ5063FCZZ	51- 4	AP	EQ	N	D	
TLABZ5112FCZZ	2- 56	AC	DJ	N	D	
TLABZ5148FCZZ	9- 37	AC	DJ		D	
TLABZ5149FCZZ	43- 18	AC	DJ	N	D	

PARTS CODE	NO.	PRICE R. Ex.	PRICE R. Ja.	NEW	P/R	
【U】						
UCLEZ0179FCZ1	24- 14	AP	EQ	N	A	
UCLEZ0180FCZ1	22- 22	AE	DJ	N	C	
【V】						
VHi28F081L66C	7- 19	AW	FG	N	B	
VHi28F161L18C	42- 5	AV	FG	N	B	
VHi28F642L02F	43- 22	BF	GN	N	B	
VHi28F642L03F	43- 23	BF	GN	N	B	
VHi28F642L04F	43- 22	BF	GN	N	B	
VHi28F642L05F	43- 23	BF	GN	N	B	
VHPGP1A71L3-1	11- 16	AG	DS		B	
〃	17- 17	AG	DS		B	
〃	38- 14	AG	DS		B	
〃	46- 53	AG	DS		B	
〃	50- 36	AG	DS		B	
〃	52- 35	AG	DS		B	
〃	55- 28	AG	DS		B	
VHPGP1S73P+-1	14- 22	AF	DS		B	
〃	15- 18	AF	DS		B	
〃	16- 16	AF	DS		B	
〃	35- 14	AF	DS		B	
〃	36- 25	AF	DS		B	
〃	46- 24	AF	DS		B	
〃	51- 16	AF	DS		B	
〃	52- 34	AF	DS		B	
〃	56- 46	AF	DS		B	
VHPGP2A200L-1	17- 12	AR	EQ		B	
VHPGP2TC21//1	20- 5	BE	GN		B	
VHPKR2051SH-1	20- 4	AW	FG	N	B	
VHPLG217L5A-1	6- 31	AM	EG	N	B	
VHPLG217L5S-1	6- 25	AM	EG	N	B	
VHPLG248NL1-1	37- 25	AF	DS	N	B	
〃	38- 9	AF	DS	N	B	
【X】						
XBBBZ30P04000	23- 38	AA	DD	N	C	
XBBS730P04000	27- 32	AA	DD		C	
〃	56- 26	AA	DD		C	
〃	58- 23	AA	DD		C	
XBBS730P05000	20- 12	AA	DD		C	
XBBS730P06000	1- 18	AC	DD		C	
〃	16- 6	AC	DD		C	
〃	22- 13	AC	DD		C	
〃	23- 43	AC	DD		C	
〃	43- 14	AC	DD		C	
〃	46- 8	AC	DD		C	
〃	6- 28	AC	DD		C	
XBBS730P12000	8- 3	AA	DD	N	C	
XBBS730P16000	50- 8	AA	DD		C	
XBBS740P06000	47- 20	AA	DD		C	
〃	7- 4	AA	DD		C	
XBBS740P08000	40- 41	AA	DD		C	
〃	43- 24	AA	DD		C	
XBBS740P14000	6- 32	AB	DD		C	
XBPS726P08000	47- 52	AA	DD		C	
XBPS730P06000	13- 5	AA	DD		C	
XBPS730P06KS0	21- 15	AB	DD		C	
〃	23- 2	AB	DD		C	
〃	40- 8	AB	DD		C	
〃	4- 4	AB	DD		C	
XBPS730P08K00	44- 21	AA	DD		C	
XBPS730P08KS0	34- 36	AB	DD		C	
〃	45- 26	AB	DD		C	
〃	46- 34	AB	DD		C	
〃	47- 48	AB	DD		C	
XBPS740P06K00	44- 3	AA	DD		C	
XBPS740P08K00	44- 10	AA	DD		C	
XBPS740P08KS0	41- 29	AB	DD		C	
XBPS740P10KS0	46- 25	AC	DD		C	
XBPS740P12KS0	18- 11	AC	DD		C	
XBPS740P25XS0	44- 8	AB	DD		C	
XBTS740P06000	1- 4	AA	DD		C	
〃	7- 42	AA	DD		C	
XBTSC50P16000	1- 22	AA	DD		C	
XEBS730P05000	23- 24	AA	DD		C	
XEBS730P06000	26- 9	AA	DD		C	
〃	27- 4	AA	DD		C	
XEBS730P08000	11- 2	AC	DD		C	
〃	12- 6	AC	DD		C	
〃	14- 15	AC	DD		C	
〃	15- 20	AC	DD		C	
〃	16- 17	AC	DD		C	

PARTS CODE	NO.	PRICE R. Ex.	PRICE R. Ja.	NEW	P/R	
XEBS730P08000	17- 2	AC	DD		C	
〃	18- 23	AC	DD		C	
〃	20- 3	AC	DD		C	
〃	21- 10	AC	DD		C	
〃	22- 3	AC	DD		C	
〃	2- 36	AC	DD		C	
〃	23- 7	AC	DD		C	
〃	26- 41	AC	DD		C	
〃	29- 17	AC	DD		C	
〃	30- 3	AC	DD		C	
〃	31- 11	AC	DD		C	
〃	32- 36	AC	DD		C	
〃	37- 1	AC	DD		C	
〃	4- 13	AC	DD		C	
〃	45- 4	AC	DD		C	
〃	46- 44	AC	DD		C	
〃	46- 5	AC	DD		C	
〃	47- 17	AC	DD		C	
〃	50- 23	AC	DD		C	
〃	50- 40	AC	DD		C	
〃	51- 13	AC	DD		C	
〃	5- 17	AC	DD		C	
〃	53- 26	AC	DD		C	
〃	8- 2	AC	DD		C	
〃	9- 2	AC	DD		C	
XEBS730P10000	23- 34	AC	DD		C	
〃	24- 4	AC	DD		C	
〃	28- 2	AC	DD		C	
〃	35- 15	AC	DD		C	
〃	36- 24	AC	DD		C	
〃	50- 25	AC	DD		C	
XEBS730P16000	46- 43	AA	DD		C	
〃	52- 42	AA	DD		C	
XEBS740P06000	9- 23	AA	DD		C	
XEBS740P08000	1- 20	AA	DD		C	
〃	2- 5	AA	DD		C	
〃	26- 18	AA	DD		C	
〃	27- 37	AA	DD		C	
〃	29- 3	AA	DD		C	
〃	34- 41	AA	DD		C	
〃	46- 59	AA	DD		C	
〃	48- 21	AA	DD		C	
XEBS740P10000	10- 5	AA	DD		C	
〃	11- 10	AA	DD		C	
〃	12- 19	AA	DD		C	
〃	15- 6	AA	DD		C	
〃	16- 7	AA	DD		C	
〃	17- 3	AA	DD		C	
〃	18- 25	AA	DD		C	
〃	25- 16	AA	DD		C	
〃	34- 2	AA	DD		C	
〃	35- 31	AA	DD		C	
〃	36- 20	AA	DD		C	
〃	37- 18	AA	DD		C	
〃	38- 20	AA	DD		C	
〃	39- 16	AA	DD		C	
〃	50- 17	AA	DD		C	
〃	50- 5	AA	DD		C	
〃	51- 7	AA	DD		C	
〃	52- 28	AA	DD		C	
〃	53- 17	AA	DD		C	
〃	55- 2	AA	DD		C	
〃	57- 10	AA	DD		C	
XEBS740P12000	13- 2	AA	DD		C	
〃	9- 15	AA	DD		C	
XEBS740P14000	12- 11	AB	DD	N	C	
XEBS740P40000	47- 37	AC	DD		C	
XEPS730P05000	4- 11	AA	DD		C	
XEPS730P06X00	14- 10	AA	DD		C	
XEPS730P08X00	15- 13	AA	DD		C	
〃	34- 27	AA	DD		C	
〃	51- 17	AA	DD		C	
〃	52- 46	AA	DD		C	
XEPS730P08XS0	28- 15	AB	DD	N	C	
XEPS740P06000	7- 37	AB	DD		C	
XEPS840P08X00	31- 1	AC	DD		C	
XHBS730P04000	32- 3	AA	DD		C	
〃	33- 19	AA	DD		C	
〃	6- 2	AA	DD		C	
XHBS730P05000	6- 1	AA	DD		C	
XHBS730P06000	2- 10	AC	DD		C	

PARTS CODE	NO.	PRICE R. Ex.	PRICE R. Ja.	NEW	P/R	
XHBS730P06000	32- 15	AC	DD		C	
〃	33- 10	AC	DD		C	
〃	34- 6	AC	DD		C	
〃	37- 30	AC	DD		C	
〃	38- 21	AC	DD		C	
〃	43- 13	AC	DD		C	
〃	45- 34	AC	DD		C	
〃	47- 25	AC	DD		C	
〃	48- 30	AC	DD		C	
〃	50- 7	AC	DD		C	
〃	5- 32	AC	DD		C	
〃	56- 52	AC	DD		C	
〃	6- 15	AC	DD		C	
〃	7- 13	AC	DD		C	
XHBS730P08000	15- 5	AB	DD		C	
〃	16- 4	AB	DD		C	
〃	17- 20	AB	DD		C	
〃	18- 26	AB	DD		C	
〃	20- 8	AB	DD		C	
〃	21- 9	AB	DD		C	
〃	34- 23	AB	DD		C	
〃	39- 18	AB	DD		C	
〃	40- 22	AB	DD		C	
〃	41- 13	AB	DD		C	
〃	42- 2	AB	DD		C	
〃	44- 4	AB	DD		C	
〃	47- 6	AB	DD		C	
〃	56- 23	AB	DD		C	
〃	58- 25	AB	DD		C	
〃	58- 29	AB	DD		C	
XHBS730P08KS0	6- 26	AC	DD		C	
〃	6- 9	AC	DD		C	
XHBS730P14000	48- 39	AA	DD		C	
XHBS730P30000	42- 8	AB	DD	N	C	
〃	44- 12	AB	DD	N	C	
XHBS730P35000	39- 43	AK	DX	N	C	
XHBS740P06000	36- 41	AA	DD		C	
〃	58- 13	AA	DD		C	
〃	6- 12	AA	DD		C	
〃	7- 26	AA	DD		C	
XHBS740P08000	10- 18	AA	DD		C	
〃	11- 7	AA	DD		C	
〃	1- 2	AA	DD		C	
〃	12- 20	AA	DD		C	
〃	13- 17	AA	DD		C	
〃	14- 2	AA	DD		C	
〃	15- 25	AA	DD		C	
〃	17- 23	AA	DD		C	
〃	19- 5	AA	DD		C	
〃	20- 13	AA	DD		C	
〃	21- 2	AA	DD		C	
〃	2- 2	AA	DD		C	
〃	26- 32	AA	DD		C	
〃	34- 3	AA	DD		C	
〃	35- 5	AA	DD		C	
〃	36- 39	AA	DD		C	
〃	37- 33	AA	DD		C	
〃	39- 39	AA	DD		C	
〃	41- 4	AA	DD		C	
〃	44- 7	AA	DD		C	
〃	45- 2	AA	DD		C	
〃	46- 2	AA	DD		C	
〃	47- 2	AA	DD		C	
〃	48- 3	AA	DD		C	
〃	50- 49	AA	DD		C	
〃	53- 3	AA	DD		C	
〃	55- 8	AA	DD		C	
〃	56- 47	AA	DD		C	
〃	6- 22	AA	DD		C	
〃	7- 29	AA	DD		C	
XHBS740P10000	34- 4	AA	DD		C	
〃	35- 22	AA	DD		C	
XHPS740P08KS0	21- 16	AD	DJ		C	
XJBS740P08000	3- 6	AB	DD		C	
XJBS740P10000	3- 8	AB	DD		C	
XNES730-24000	50- 13	AA	DD		C	
XPSSJ20-08000	45- 16	AA	DD		C	
XPSSP20-10000	52- 8	AA	DD	N	C	
〃	54- 15	AA	DD	N	C	
〃	55- 16	AA	DD	N	C	
〃	56- 17	AA	DD	N	C	

PARTS CODE	NO.	PRICE R. Ex.	PRICE R. Ja.	NEW	P/R	
XPSSP20-10000	58- 11	AA	DD	N	C	
XRESP25-04000	22- 9	AA	DD		C	
XRESP30-04000	54- 8	AA	DD		C	
〃	55- 7	AA	DD		C	
〃	56- 14	AA	DD		C	
XRESP30-06000	22- 29	AA	DD		C	
〃	29- 7	AA	DD		C	
〃	4- 2	AA	DD		C	
〃	50- 42	AA	DD		C	
〃	51- 10	AA	DD		C	
XRESP40-05000	37- 23	AA	DD		C	
〃	38- 25	AA	DD		C	
XRESP40-06000	11- 30	AA	DD		C	
〃	16- 23	AA	DD		C	
〃	23- 13	AA	DD		C	
〃	26- 29	AA	DD		C	
〃	33- 7	AA	DD		C	
〃	34- 13	AA	DD		C	
〃	35- 2	AA	DD		C	
〃	39- 30	AA	DD		C	
〃	46- 31	AA	DD		C	
〃	46- 51	AA	DD		C	
〃	52- 16	AA	DD		C	
〃	53- 24	AA	DD		C	
〃	54- 6	AA	DD		C	
XRESP50-06000	10- 1	AA	DD		C	
〃	11- 14	AA	DD		C	
〃	12- 4	AA	DD		C	
〃	15- 7	AA	DD		C	
〃	16- 26	AA	DD		C	
〃	17- 4	AA	DD		C	
〃	22- 26	AA	DD		C	
〃	23- 6	AA	DD		C	
〃	26- 5	AA	DD		C	
〃	28- 11	AA	DD		C	
〃	30- 19	AA	DD		C	
〃	33- 3	AA	DD		C	
〃	34- 25	AA	DD		C	
〃	36- 10	AA	DD		C	
〃	37- 11	AA	DD		C	
〃	38- 1	AA	DD		C	
〃	39- 8	AA	DD		C	
〃	40- 3	AA	DD		C	
〃	41- 19	AA	DD		C	
〃	45- 27	AA	DD		C	
〃	52- 7	AA	DD		C	
〃	53- 13	AA	DD		C	
〃	54- 10	AA	DD		C	
〃	55- 10	AA	DD		C	
〃	55- 39	AA	DD		C	
〃	56- 8	AA	DD		C	
〃	57- 7	AA	DD		C	
〃	58- 21	AA	DD		C	
XRESP70-08000	15- 3	AA	DD		C	
〃	17- 22	AA	DD		C	
〃	18- 9	AA	DD		C	
〃	27- 14	AA	DD		C	
〃	28- 18	AA	DD		C	
〃	38- 37	AA	DD		C	
〃	39- 24	AA	DD		C	
〃	40- 6	AA	DD		C	
〃	41- 22	AA	DD		C	
〃	7- 18	AA	DD		C	
〃	9- 24	AA	DD		C	
XRESP80-08000	21- 22	AA	DD		C	
XRESP90-08000	40- 26	AA	DD		C	
XWHS730-05080	32- 4	AA	DD		C	
〃	33- 18	AA	DD		C	
〃	52- 41	AA	DD		C	
〃	56- 30	AA	DD		C	
〃	58- 31	AA	DD		C	
XWHS760-08115	54- 3	AA	DD	N	C	

注 意

・電池を正しく交換しないと爆発を起こす危険がある。

・機器製造者が指定したものと同一型名のもの、又は、
その同等の電池とのみ交換すること。

・使用済みの電池は、製造者の指示に従って処分すること。

CAUTION FOR BATTERY REPLACEMENT

(Danish) ADVARSEL !
Lithiumbatteri - Eksplosionsfare ved fejlagtig håndtering.
Udskiftning må kun ske med batteri
af samme fabrikat og type.
Levér det brugte batteri tilbage til leverandoren.

(English) Caution !
Danger of explosion if battery is incorrectly replaced.
Replace only with the same or equivalent type
recommended by the manufacturer.
Dispose of used batteries according to manufacturer's instructions.

(Finnish) VAROITUS
Paristo voi räjähtää,jos se on virheellisesti asennettu.
Vaihda paristo ainoastaan laitevalmistajan suosittelemaan
tyyppiin. Hävitä käytetty paristo valmistajan ohjeiden
mukaisesti.

(French) ATTENTION
Il y a danger d'explosion s'il y a remplacement incorrect
de la batterie. Remplacer uniquement avec une batterie du
même type on d'un type équivalent recommandé par
le constructeur.
Mettre au rébut les batteries usagées conformément aux
instructions du fabricant.

(Swedish) VARNING
Explosionsfara vid felaktigt batteribyte.
Använd samma batterityp eller en ekvivalent
typ som rekornmenderas av apparattillverkaren.
Kassera använt batteri enligt fabrikantens
Instruktion.

(German) Achtung
Explosionsgefahr bei Verwendung inkorrekter Batterien.
Als Ersatzbatterien dürfen nur Batterien vom gleichen Typ oder
vom Hersteller empfohlene Batterien verwendet werden.
Entsorgung der gebrauchten Batterien nur nach den vom
Hersteller angegebenen Anwerisugen.

CAUTION FOR BATTERY DISPOSAL

(For USA,CANADA)

"BATTERY DISPOSAL"
THIS PRODUCT CONTAINS A LITHIUM PRIMARY
(MANGANESS DIOXIDE) MEMORY BACK-UP BATTERY
THAT MUST BE DISPOSED OF PROPERLY. REMOVE THE
BATTERY FROM THE PRODUCT AND CONTACT YOUR
LOCAL ENVIRONMENTAL AGENCIES FOR INFORMATION
ON RECYCLING AND DISPOSAL OPTIONS.

"TRAITEMENT DES PILES USAGÉES"
CE PRODUIT CONTIENT UNE PILE DE SAUVEGARDE DE
MÉMOIRE LITHIUM PRIMAIRE (DIOXYDE DE MANGANESE)
QUI DOIT ÊTRE TRAITÉE CORRECTEMENT. ENLEVEZ LA
PILE DU PRODUIT ET PRENEZ CONTACT AVEC VOTRE
AGENCE ENVIRONNEMENTALE LOCALE POUR DES
INFORMATIONS SUR LES MÉTHODES DE RECYCLAGE ET
DE TRAITEMENT.

SHARP

COPYRIGHT © 2005 BY SHARP CORPORATION

All rights reserved.
Printed in Japan.
No part of this publication may be reproduced,
stored in a retrieval system, or transmitted.
In any form or by any means,
electronic, mechanical, photocopying, recording, or otherwise,
without prior written permission of the publisher.

SHARP CORPORATION
Digital Document System Group
CS PROMOTION CENTER
Yamatokoriyama, Nara 639-1186, Japan
2005 November Printed in Japan ⓣ